# Appendixes to AT Commands Interface Guide for x50a

| | |
|---|---|
| Revision: | **003** |
| Date: | **9th December 2004** |
| Reference: | **WM_ASW_OAT_UGD_016** |

wavecom © 2003-2004 All rights reserved
Wavecom Confidential & Proprietary Information

This document is the sole and exclusive property of WAVECOM. Not to be distributed or divulged without prior written agreement.

# Overview

This document contains the technical appendixes for AT Commands Interface Guide for x50a document (file WM_ASW_OAT_UGD_016-003.pdf ).

# Trademarks

®, WAVECOM®, WISMO®, MUSE Platform®, and certain other trademarks and logos appearing on this document, are filed or registered trademarks of Wavecom S.A. in France or in other countries. All other company and/or product names mentioned may be filed or registered trademarks of their respective owners.


All rights reserved
Wavecom Confidential & Proprietary Information
This document is the sole and exclusive property of WAVECOM. Not to be distributed or divulged without prior written agreement.

# Document History

| Revision | Date | History of the evolution | |
|---|---|---|---|
| 001 | 15 July 2004 | First edition for X50 AT software (this is the appendix part of the full document). | |
| 002 | 18 Oct 2004 | Second edition, add 539 error code | |
| 003 | 9 Dec 2004 | Updates for AT X50a revision. Correction in RS232 power down control | |

© 2003-2004 All rights reserved
Wavecom Confidential & Proprietary Information
This document is the sole and exclusive property of WAVECOM. Not to be distributed or divulged without prior written agreement.

# Contents

1 CODES AND VALUES ..... 6

1.1 ME error result code: +CME ERROR ..... 6
1.2 Message service failure result code: +CMS ERROR ..... 7
1.3 Specific error result codes ..... 8
1.4 Failure Cause from GSM 04.08 recommendation (+CEER) ..... 9
1.5 Specific Failure Cause for +CEER ..... 11
1.6 GSM 04.11 Annex E-2: Mobile originating SM-transfer ..... 12
1.7 Unsolicited result codes ..... 14
1.8 Final result codes ..... 15
1.9 Intermediate result codes ..... 15
1.10 Parameters storage ..... 16
1.11 GSM sequences list ..... 19
1.12 Operator names ..... 23
1.13 CPHS Information field ..... 38
1.14 CSP constants ..... 39

2 EXAMPLES ..... 42

2.1 Examples with the PIN required ..... 42
2.2 Examples where a voice call is originated ..... 43
2.3 Example with incoming calls ..... 44
2.4 Example of a call forwarding ..... 44
2.5 Example of a multiparty call ..... 45
2.6 Examples about phonebooks ..... 46
2.7 Examples about short messages ..... 53
2.8 Examples about Fax class 2 ..... 54
2.9 +CSIM and +CRSM Examples ..... 56
2.10 Examples about WAP commands ..... 57

© 2003-2004 All rights reserved
Wavecom Confidential & Proprietary Information
This document is the sole and exclusive property of WAVECOM. Not to be distributed or divulged without prior written agreement.

3 TECHNICAL APPENDIXES ..... 61

3.1 Data / Commands multiplexing protocol ..... 61
3.2 Support of SIM ToolKit by the M.E. ..... 64
3.3 Structure of TERMINAL PROFILE ..... 65
3.4 Command Type and Next Action Indicator. ..... 69
3.5 Coding of Alpha fields in the SIM for UCS2 ..... 70
3.6 Specification of Power Down Control via RS232 ..... 72
3.7 Description of Multi-Flow behavior ..... 74

4 COMMAND EXECUTION AND DEPENDENCE TO SIM ..... 77

4.1 General commands ..... 77
4.2 Call Control commands ..... 78
4.3 Network service commands ..... 78
4.4 Security commands ..... 78
4.5 Phonebook commands ..... 79
4.6 Short Messages commands ..... 79
4.7 Supplementary Services commands ..... 80
4.8 Data commands ..... 80
4.9 Fax commands ..... 81
4.10 Class 2 Commands ..... 81
4.11 V24-V25 commands ..... 82
4.12 Specific AT commands ..... 82
4.13 Agenda Commands ..... 83
4.14 WAP commands ..... 84
4.15 SIM Toolkit commands ..... 84
4.16 GPRS commands ..... 84

5 INTEROPERABILITY ..... 85

© 2003-2004 All rights reserved
Wavecom Confidential & Proprietary Information
This document is the sole and exclusive property of WAVECOM. Not to be distributed or divulged without prior written agreement.

# 1 Codes and values

## 1.1 ME error result code: +CME ERROR

<error> is defined as below:

| <error> | Meaning | Resulting from the following commands |
|---|---|---|
| 3 | Operation not allowed | All GSM 07.07 commands (+CME ERROR: 3) |
| 4 | Operation not supported | All GSM 07.07 commands (+CME ERROR: 4) |
| 5 | PH-SIM PIN required (SIM lock) | All GSM 07.07 commands (+CME ERROR: 5) |
| 10 | SIM not inserted | All GSM 07.07 commands (+CME ERROR: 10) |
| 11 | SIM PIN required | All GSM 07.07 commands (+CME ERROR: 11) |
| 12 | SIM PUK required | All GSM 07.07 commands (+CME ERROR: 12) |
| 13 | SIM failure | All GSM 07.07 commands (+CME ERROR: 13) |
| 16 | Incorrect password | +CACM, +CAMM, +CPUC, +CLCK, +CPWD, +CPIN, +CPIN2 (+CME ERROR: 16) |
| 17 | SIM PIN2 required | +CPBW (FDN), +CLCK (FDN), |
| 18 | SIM PUK2 required | +CACM, +CAMM, +CPUC, +CPBW (FDN), +CPIN, +CPIN2, +CLCK (FDN), +CPWD |
| 20 | Memory full | +CPBW |
| 21 | Invalid index | +CPBR, +CPBW, ATD>[mem]index, +WMGO, +WPGW |
| 22 | Not found | +CPBF, +CPBP, +CPBN, +CGSN, +WOPN, ATD>[mem]"name" |
| 24 | Text string too long | +CPBW, +CPIN, +CPIN2, +CLCK, +CPWD, +WPGW, +WCCS |
| 26 | Dial string too long | +CPBW, ATD, +CCFC |
| 27 | Invalid characters in dial string | +CPBW |
| 30 | No network service | +VTS, +COPS=?, +CLCK, +CCFC, +CCWA, +CUSD |
| 32 | Network not allowed – emergency calls only | +COPS |
| 40 | Network personalization PIN required (Network lock) | All GSM 07.07 commands (+CME ERROR: 40) |
| 103 | Incorrect MS identity. | +CGATT |
| 106 | ME is not blacklisted by the network. | +CGATT |
| 107 | MS is not allowed to operate in GPRS. | +CGATT |
| 111 | MS is not allowed to operate in the requested PLMN. | +CGATT |
| 112 | MS is not allowed to make location updating in this area. | +CGATT |

wavecom © 2003-2004 All rights reserved
Wavecom Confidential & Proprietary Information

This document is the sole and exclusive property of WAVECOM. Not to be distributed or divulged without prior written agreement.

| <error> | Meaning | Resulting from the following commands |
|---|---|---|
| 113 | Roaming in this location area is not allowed. | +CGATT |
| 132 | service option not supported (#32) | +CGACT +CGDATA ATD*99 |
| 133 | requested service option not subscribed (#33) | +CGACT +CGDATA ATD*99 |
| 134 | service option temporarily out of order (#34) | +CGACT +CGDATA ATD*99 |
| 148 | unspecified GPRS error | All GPRS commands |
| 149 | PDP authentication failure | +CGACT +CGDATA ATD*99 |
| 150 | invalid mobile class | +CGCLASS +CGATT |

## 1.2 Message service failure result code: +CMS ERROR

<er> is defined as below:

| <er> | Meaning | Resulting from the following commands |
|---|---|---|
| 1 to 127 | Error cause values from the GSM recommendation 04.11 Annex E-2 | +CMGS, +CMSS |
| 301 | SMS service of ME reserved | +CSMS (with +CMS: ERROR 301) |
| 302 | Operation not allowed | All SMS commands (+CMSS, +CMGL, +CPMS, +CSMP... |
| 303 | Operation not supported | All SMS commands |
| 304 | Invalid PDU mode parameter | +CMGS, +CMGW |
| 305 | Invalid text mode parameter | +CMGS, +CMGW, +CMSS |
| 310 | SIM not inserted | All SMS commands |
| 311 | SIM PIN required | All SMS commands |
| 312 | PH-SIM PIN required | All SMS commands |
| 313 | SIM failure | All SMS commands |
| 316 | SIM PUK required | All SMS commands |
| 317 | SIM PIN2 required | All SMS commands |
| 318 | SIM PUK2 required | All SMS commands |
| 321 | Invalid memory index | +CMGR, +CMSS, +CMGD |
| 322 | SIM or ME memory full | +CMGW |
| 330 | SC address unknown | +CSCA?, +CMSS, +CMGS |
| 340 | no +CNMA acknowledgement expected | +CNMA |

wavecom © 2003-2004 All rights reserved
Wavecom Confidential & Proprietary Information

This document is the sole and exclusive property of WAVECOM. Not to be distributed or divulged without prior written agreement.

## 1.3 Specific error result codes

| <error> | Meaning | Resulting from the following commands |
|---|---|---|
| 500 | unknown error. | All commands |
| 512 | MM establishment failure (for SMS). | +CMGS, +CMSS (+CMS ERROR: 512) |
| 513 | Lower layer failure (for SMS) | +CMGS, +CMSS (+CMS ERROR: 513) |
| 514 | CP error (for SMS). | +CMGS, +CMSS (+CMS ERROR: 514) |
| 515 | Please wait, init or command processing in progress. | All commands ("+CME ERROR: 515" or "+CMS ERROR: 515") except ATH0, ATH1, AT+WIOR, AT+WIOW, AT+CFUN=1, AT+CLCC, AT+WAC, AT+CPAS, AT+VGR, AT+VTS, AT+SPEAKER. |
| 517 | SIM Toolkit facility not supported. | +STGI |
| 518 | SIM Toolkit indication not received. | +STGI |
| 519 | Reset the product to activate or change a new echo cancellation algorithm. | +ECHO, +VIP |
| 520 | Automatic abort about get PLMN list for an incoming call. | +COPS=? |
| 526 | PIN deactivation forbidden with this SIM card. | +CLCK |
| 527 | Please wait, RR or MM is busy. Retry your selection later. | +COPS |
| 528 | Location update failure. Emergency calls only. | +COPS |
| 529 | PLMN selection failure. Emergency calls only. | +COPS |
| 531 | SMS not sent: the <da> is not in FDN phonebook, and FDN lock is enabled. (for SMS) | +CMGS, +CMSS (+CMS ERROR: 531) |
| 532 | the embedded application is activated so the objects flash are not erased | +WOPEN |
| 533 | Missing or Unknown APN | ATD*99 +GACT +CGDATA |
| 536 | Class locked: a command has been launched from a port, the effect is to lock all commands belonging to the same class. If another port launches a command of this class, this error will occur as long as the class is not released (at first command's completion time) | All commands |
| 537 | Phonebook group full. | +CPBW |
| 538 | Not Enough Space to copy SMS | +WMCP |
| 539 | Invalid SMS | +CMGR |
| 541 | Open AT application and AT software version do not match | +WOPEN |

wavecom © 2003-2004 All rights reserved
Wavecom Confidential & Proprietary Information

This document is the sole and exclusive property of WAVECOM. Not to be distributed or divulged without prior written agreement.

## 1.4 Failure Cause from GSM 04.08 recommendation (+CEER)

| Cause value | Diagnostic |
|---|---|
| 1 | Unassigned (unallocated) number |
| 3 | No route to destination |
| 6 | Channel unacceptable |
| 8 | Operator determined barring |
| 16 | Normal call clearing |
| 17 | User busy |
| 18 | No user responding |
| 19 | User alerting, no answer |
| 21 | Call rejected |
| 22 | Number changed |
| 26 | Non selected user clearing |
| 27 | Destination out of order |
| 28 | Invalid number format (incomplete number) |
| 29 | Facility rejected |
| 30 | Response to STATUS ENQUIRY |
| 31 | Normal, unspecified |
| 34 | No circuit/channel available |
| 38 | Network out of order |
| 41 | Temporary failure |
| 42 | Switching equipment congestion |
| 43 | Access information discarded |
| 44 | Requested circuit/channel not available |
| 47 | Resources unavailable, unspecified |
| 49 | Quality of service unavailable |
| 50 | Requested facility not subscribed |
| 55 | Incoming calls barred with in the CUG |
| 57 | Bearer capability not authorized |
| 58 | Bearer capability not presently available |
| 63 | Service or option not available, unspecified |
| 65 | Bearer service not implemented |
| 68 | ACM equal to or greater than ACMmax |
| 69 | Requested facility not implemented |
| 70 | Only restricted digital information bearer capability is available |
| 79 | Service or option not implemented, unspecified |
| 81 | Invalid transaction identifier value |

© 2003-2004 All rights reserved
Wavecom Confidential & Proprietary Information

This document is the sole and exclusive property of WAVECOM. Not to be distributed or divulged without prior written agreement.

| Cause value | Diagnostic |
|---|---|
| 87 | User not member of CUG |
| 88 | Incompatible destination |
| 91 | Invalid transit network selection |
| 95 | Semantically incorrect message |
| 96 | Invalid mandatory information |
| 97 | Message type non-existent or not implemented |
| 98 | Message type not compatible with protocol state |
| 99 | Information element non-existent or not implemented |
| 100 | Conditional IE error |
| 101 | Message not compatible with protocol state |
| 102 | Recovery on timer expiry |
| 111 | Protocol error, unspecified |
| 127 | Inter-working, unspecified |
| 224 | MS requested detach |
| 225 | NWK requested Detach |
| 226 | Unsuccessful attach cause NO SERVICE |
| 227 | Unsuccessful attach cause NO ACCESS |
| 228 | Unsuccessful attach cause GPRS SERVICE REFUSED |
| 229 | PDP Deactivation requested by NWK |
| 230 | PDP Deactivation because LLC link activation Failed |
| 231 | PDP Deactivation cause NWK reactivation with same TI |
| 232 | PDP Deactivation cause GMM abort |
| 233 | PDP Deactivation cause LLC or SNDCP failure |
| 234 | PDP Unsuccessful activation cause GMM error |
| 235 | PDP Unsuccessful activation cause NWK reject |
| 236 | PDP Unsuccessful activation cause NO NSAPI available |
| 237 | PDP Unsuccessful activation cause SM refuse |
| 238 | PDP Unsuccessful activation cause MMI ignore |
| 239 | PDP unsuccessful activation cause Nb Max Session Reach |

| All other values in the range | will be treated as cause |
|---|---|
| [0,31] | 31 |
| [32,47] | 47 |
| [48,63] | 63 |
| [64,79] | 79 |
| [80,95] | 95 |
| [96,111] | 111 |
| [112,127] | 127 |

wavecom © 2003-2004 All rights reserved
Wavecom Confidential & Proprietary Information

This document is the sole and exclusive property of WAVECOM. Not to be distributed or divulged without prior written agreement.

## 1.5 Specific Failure Cause for +CEER

| Cause value | Diagnostic |
|---|---|
| 240 | FDN is active and number is not in FDN |
| 241 | Call operation not allowed |
| 252 | Call barring on outgoing calls |
| 253 | Call barring on incoming calls |
| 254 | Call impossible |
| 255 | Lower layer failure |

© 2003-2004 All rights reserved
Wavecom Confidential & Proprietary Information
This document is the sole and exclusive property of WAVECOM. Not to be distributed or divulged without prior written agreement.

## 1.6 GSM 04.11 Annex E-2: Mobile originating SM-transfer

These error causes could appear for **SMS commands** (+CMGS, +CMSS, +CMGD...)

| Error # | Error label | Description |
|---|---|---|
| 1 | Unassigned (unallocated) number | The destination requested by the Mobile Station cannot be reached because, although the number is in a valid format, it is not currently assigned (allocated). |
| 8 | Operator determined barring | The MS has tried to send a mobile originating short message when the MS's network operator or service provider has forbidden such transactions. |
| 10 | Call barred | The outgoing call barred service applies to the short message service for the called destination. |
| 21 | Short message transfer rejected | The equipment sending this cause does not wish to accept this short message, although it could have accepted the short message since the equipment sending. This cause is neither busy nor incompatible. |
| 27 | Destination out of service | The destination indicated by the Mobile Station cannot be reached because the interface to the destination is not functioning correctly. The term "not functioning correctly" indicates that a signaling message was unable to be delivered to the remote user; e.g., a physical layer or data link layer failure at the remote user, user equipment off-line, etc. |
| 28 | Unidentified subscriber | The subscriber is not registered in the PLMN (e.g.. IMSI not known) |
| 29 | Facility rejected | The facility requested by the Mobile Station is not supported by the PLMN. |
| 30 | Unknown subscriber | The subscriber is not registered in the HLR (e.g.. IMSI or directory number is not allocated to a subscriber). |
| 38 | Network out of order | The network is not functioning correctly and the condition is likely to last a relatively long period of time; e.g., immediately reattempting the short message transfer is not likely to be successful. |
| 41 | Temporary failure | The network is not functioning correctly and the condition is not likely to last a long period of time; e.g., the Mobile Station may wish to try another short message transfer attempt almost immediately. |
| 42 | Congestion | The short message service cannot be serviced because of high traffic. |
| 47 | Resources unavailable, unspecified | This cause is used to report a resource unavailable event only when no other cause applies. |

© 2003-2004 All rights reserved
Wavecom Confidential & Proprietary Information

This document is the sole and exclusive property of WAVECOM. Not to be distributed or divulged without prior written agreement.

| Error # | Error label | Description |
|---|---|---|
| 50 | Requested facility not subscribed | The requested short message service could not be provided by the network because the user has not completed the necessary administrative arrangements with its supporting networks. |
| 69 | Requested facility not implemented | The network is unable to provide the requested short message service. |
| 81 | Invalid short message transfer reference value | The equipment sending this cause has received a message with a short message reference which is not currently in use on the MS-network interface. |
| 95 | Invalid message, unspecified | This cause is used to report an invalid message event only when no other cause in the invalid message class applies. |
| 96 | Invalid mandatory information | The equipment sending this cause has received a message where a mandatory information element is missing and/or has a content error (both cases are undistinguishable). |
| 97 | Message type non-existent or not implemented | The equipment sending this cause has received a message with a message type it does not recognize either because this is a message not defined or defined but not implemented by the equipment sending this cause. |
| 98 | Message not compatible with short message protocol state | The equipment sending this cause has received a message such that the procedures do not indicate that this is a permissible message to receive while in the short message transfer state. |
| 99 | Information element non-existent or not implemented | The equipment sending this cause has received a message which includes unrecognized information elements because the information element identifier is not defined or it is defined but not implemented by the equipment sending the cause.<br>However, the information element is not required to be present in the message so that the equipment sends the cause to process the message. |
| 111 | Protocol error, unspecified | This cause is used to report a protocol error event only when no other cause applies. |
| 127 | Inter-working, unspecified | There has been inter-working with a network which does not provide causes for actions it takes; thus, the precise cause for a message which is being sent cannot be ascertained. |

All values other than specified should be treated as error #41.

wavecom © 2003-2004 All rights reserved
Wavecom Confidential & Proprietary Information

This document is the sole and exclusive property of WAVECOM. Not to be distributed or divulged without prior written agreement.

## 1.7 Unsolicited result codes

| Verbose result code | Numeric (V0 set) | Description |
|---|---|---|
| +CALA: < time string>,<index> | As verbose | Alarm notification |
| +CBM: <length><pdu> (PDU)<br>or<br>+CBM:<sn>,<mid>,<dcs>,<page>,<pages>... (Text mode) | As verbose | Cell Broadcast Message directly displayed |
| +CBMI: "BM",<index> | As verbose | Cell Broadcast Message stored in mem at location <index> |
| +CCCM: <ccm> | As verbose | Current Call Meter value |
| +CCED: <values> | As verbose (specific) | Cell Environment Description indication |
| +CCWA:<number>,<type>, <class> [,<alpha>] | As verbose | Call Waiting number |
| +CDS: <fo>, <mr>... (text mode)<br>or +CDS: <length>,... (PDU) | As verbose | SMS status report after sending a SMS |
| +CDSI: <mem>,<index> | As verbose | Incoming SMS Status Report after sending a SMS, stored in <mem> ("SR") at location <index> |
| +CKEV: <keynb> | As verbose | Key press or release |
| +CLIP: <number>, <type> [,,,<alpha>] | As verbose | Incoming Call Presentation |
| +CMT: <oa>... (text mode)<br>or +CMT: [<alpha>,]... (PDU) | As verbose | Incoming message directly displayed |
| +CMTI: <mem>,<index> | as verbose | Incoming message stored in <mem> ("SM") at location <index> |
| +CREG:<mode>,<stat>[,<lac>,<ci>] | As verbose | Network registration indication |
| +CRING: <type> | As verbose | Incoming call type (VOICE, FAX ...) |
| +CSQ: <RxLev>,99 | As verbose | Automatic RxLev indication with AT+CCED=1,8 command |
| +CSSU: <code2>[<number>,<type>] | As verbose | Supplementary service notification during a call |
| +STIN: <ind> | As verbose (specific) | SIM Toolkit Indication |
| +WIND: <IndicationNb> [,<CallId>] | As verbose (specific) | Specific unsolicited indication (SIM Insert/Remove, End of init, Reset, Alerting, Call creation/release) |
| +WVMI: <LineId>,<Status> | As verbose (specific) | Voice Mail Indicator notification (cf. **+CPHS** command) |

wavecom © 2003-2004 All rights reserved
Wavecom Confidential & Proprietary Information

This document is the sole and exclusive property of WAVECOM. Not to be distributed or divulged without prior written agreement.

| Verbose result code | Numeric (V0 set) | Description |
|---|---|---|
| +WDCI: <LineId>,<Status> | As verbose (specific) | Diverted call indicator |
| RING | 2 | Incoming call signal from network |
| +WBCI | As Verbose (specific) | Battery charge indication |
| +CIEV | As Verbose (specific) | Indicator event reporting |
| +WAGI: <date string>, <time string>, <category> <alarm_offset>, <frequency>, <description>, <index> | As verbose | Appointment notification |
| +CUSD: <m>,[<str>,<dcs>] | As verbose | USSD unsolicited response |

## 1.8 Final result codes

| Verbose result code | Numeric (V0 set) | Description |
|---|---|---|
| +CME ERROR: <err> | As verbose | Error from GSM 07.05 commands |
| +CMS ERROR: <err> | As verbose | Error from SMS commands (07.07) |
| BUSY | 7 | Busy signal detected |
| ERROR | 4 | Command not accepted |
| NO ANSWER | 8 | Connection completion timeout |
| NO CARRIER | 3 | Connection terminated |
| OK | 0 | Acknowledges correct execution of a command line |
| RING | 2 | Incoming call signal from network |

## 1.9 Intermediate result codes

| Verbose result code | Numeric (V0 set) | Description |
|---|---|---|
| +COLP:<number>,<type> | as verbose | Outgoing Call Presentation |
| +CR: <type> | as verbose | Outgoing Call report control |
| +ILRR: <rate> | as verbose | Local TA-TE data rate |
| CONNECT 300 | 10 | Data connection at 300 bauds |
| CONNECT 1200 | 11 | Data connection at 1200 bauds |
| CONNECT 1200/75 | 12 | Data connection at 1200/75 bauds |
| CONNECT 2400 | 13 | Data connection at 2400 bauds |
| CONNECT 4800 | 14 | Data connection at 4800 bauds |
| CONNECT 9600 | 15 | Data connection at 9600 bauds |
| CONNECT 14400 | 16 | Data connection at 14400 bauds |
| +CSSI: <code1>[,<index>] | As verbose | Supplementary service notification during a call setup |

wavecom © 2003-2004 All rights reserved
Wavecom Confidential & Proprietary Information

This document is the sole and exclusive property of WAVECOM. Not to be distributed or divulged without prior written agreement.

## 1.10 Parameters storage

| | Parameters storage mode | | | | |
|---|---|---|---|---|---|
| Command | AT&W (E2P) | Command (E2P) | AT+CSAS (SIM, E2P) | AT&F (SIM, E2P) | Default values |
| **General commands** | | | | | |
| | | | | | |
| +CMEE | X | | | X | 0 |
| +CRSL | | X | | X | 6 |
| +CSCS | X | | | X | "PCCP437" |
| +WPCS | X | | | X | "TRANSPARENT" |
| **Call Control commands** | | | | | |
| %D | | X | | X | 0 |
| ATS0 | X | | | X | 0 (no auto-answer) |
| +CICB | X | | | X | 2 (speech) |
| +CSNS | X | | | X | 0 (voice) |
| +ECHO | | X | | X | For WISMO 2 and 3<br>,1,0,3,10,7 (Algo ID 1)<br>,3,30,8000,256 (Algo ID 3)<br>For WISMO 5:<br>,3,30,8000,256 (Algo ID 3) |
| +SIDET | X | | | X | 1,1 |
| +SPEAKER | X | | | X | 0 (Speaker 1 & Micro 1) |
| +VGR | X | | | X | 64 (speaker 1)<br>32 (speaker 2) |
| +VGT | X | | | X | 64 (mic 1 & ctrl 1)<br>0 (others) |
| **Network Service commands** | | | | | |
| +COPS | X | X | | X | 0,2 |
| +CREG | X | | | X | 0 |
| **Phonebook commands** | | | | | |
| | | | | | |
| +CSVM | | X | | X | 0 |
| +WAIP | X | | | X | 0 |
| +WCOS | | X | | | 0 |

wavecom © 2003-2004 All rights reserved
Wavecom Confidential & Proprietary Information

This document is the sole and exclusive property of WAVECOM. Not to be distributed or divulged without prior written agreement.

| Command | Parameters storage mode | | | | Default values |
|---|---|---|---|---|---|
| | AT&W (E2P) | Command (E2P) | AT+CSAS (SIM, E2P) | AT&F (SIM, E2P) | |
| **SMS commands** | | | | | |
| +CNMI | | | X | X | 0,1,0,0,0 |
| +CMGF | X | | | X | 1 (text) |
| +CMMS | | | | | 0 |
| +CSCA | | | X | | SIM dependant (phase 2) |
| +CSDH | X | | | X | 0 |
| +CSMP | | | X | X | 1,167,0,0 |
| +CSMS | | X | | | 0 |
| +WUSS | | X | | X | 0 |
| **Supplementary Services commands** | | | | | |
| +CCUG | | X | | | 0,0,0 |
| +CCWA | X | | | X | 0 |
| +CLIP | X | | | X | 0 |
| +COLP | X | | | X | 0 |
| +CSSN | X | | | X | 0,0 |
| +CUSD | | X | | X | 0 |
| **Data commands** | | | | | |
| %C | X | | | X | 0 |
| \N | X | | | X | 0 |
| +CBST | X | | | X | 0,0,1 |
| +CR | X | | | X | 0 |
| +CRC | X | | | X | 0 |
| +CRLP | X | | | X | 61,61,48,6,1 |
| +DOPT | X | | | X | 1,1 |
| +DS | X | | | X | 3,0,2048,20 |
| +DR | X | | | X | 0 |
| +ILRR | X | | | X | 0 |
| **Fax Class 2 commands** | | | | | |
| +FBOR | X | | | X | 0 |
| +FCQ | X | | | X | 0 |
| +FCR | X | | | X | 1 |
| +FDCC,+FDIS | X | | | X | 0,5,0,0,2,0,0,0,0 |
| +FPHCTO | X | | | X | 30 |

wavecom © 2003-2004 All rights reserved
Wavecom Confidential & Proprietary Information

This document is the sole and exclusive property of WAVECOM. Not to be distributed or divulged without prior written agreement.

| Command | Parameters storage mode: AT&W (E2P) | Command (E2P) | AT+CSAS (SIM, E2P) | AT&F (SIM, E2P) | Default values |
|---|---|---|---|---|---|
| **V24 – V25 commands** | | | | | |
| &C | X | | | | 1 |
| &D | X | | | | 2 |
| &S | X | | | | 1 |
| E | X | | | | 1 |
| Q | X | | | X | 0 |
| V | X | | | X | 1 |
| +ICF | X | | | | 3,4 |
| +IFC | X | | | | 2,2 |
| +IPR | X | | | | 115200 |
| +WMUX | X | | | X | 0 |
| **Specific commands** | | | | | |
| +ADC | | X | | X | 0 |
| +CMER | X | | | X | ,0,,0 |
| +CPHS | | X | | X | 1,0 for VMI<br>2,0 for MBN<br>4,0 for DCI |
| +WBCM | | X | | X | 0,0,4200,3300,100,5000,0 |
| +WBHV | | X | | X | 0,0<br>1,0 |
| +WBM | | X | | | 0,0 for SPI bus<br>0,4 for I2C Soft bus |
| +WCCS | | X | | | CUSTOM table is the same as PCCP437 to GSM table. |
| +WCDM | | X | | X | 0,0 |
| +WCDP | | X | | X | 0 |
| +WDR | | X | | | 0,1 for P51xx<br>2,1 (according to voice CODEC capabilities) for Q24xx and Q2501 |
| +WIND | | X | | X | 0 |
| +WIOM | | X | | | 1023,0 (for Q2xxx and P3xxx)<br>0,0 (for Q31 and P51 modules) |
| +WRIM | | X | | X | 0 |
| +WSVG | | X | | X | 0 |
| +WVR | | X | | | 5,0 |
| +WMFM | X | X | | X | 1: UART1 is activated, other ports are deactivated.<br>0: data flow is directed to UART1 |

© 2003-2004 All rights reserved
Wavecom Confidential & Proprietary Information

This document is the sole and exclusive property of WAVECOM. Not to be distributed or divulged without prior written agreement.

| Command | Parameters storage mode | | | | Default values |
|---|---|---|---|---|---|
| | AT&W (E2P) | Command (E2P) | AT+CSAS (SIM, E2P) | AT&F (SIM, E2P) | |
| **SIM Toolkit commands** | | | | | |
| +STSF | | X | | | 0,"160060C01F",3,0 |
| **GPRS commands** | | | | | |
| +CGAUTO | X | | | **X** | 3 |
| +CGCLASS | | X | | | "B" |
| +CGDCONT | | x | | | |
| +CGEREP | X | | | X | 0 |
| +CGREG | X | | | **X** | 0 |
| +CGSMS | | X | | | 1 |
| +WGPRS | | X | | | 0,1<br>1,0<br>3,0<br>5,0<br>6,0 |

## 1.11 GSM sequences list

In accordance with **GSM 02.30**, the product supports the following GSM sequences, which can be used through the ATD and the +CKPD commands.

### 1.11.1 Security

| | |
|---|---|
| Change PIN code | ****04*** *OLDPIN* ***** *NEWPIN* ***** *NEWPIN* **#** |
| Change PIN2 code | ****042*** *OLDPIN2* ***** *NEWPIN2* ***** *NEWPIN2* **#** |
| Unlock PIN code | ****05*** *PUK* ***** *NEWPIN* ***** *NEWPIN* **#** |
| Unlock PIN2 code | ****052*** *PUK2* ***** *NEWPIN2* ***** *NEWPIN2* **#** |
| Show the IMEI number | ***#06#** |

wavecom © 2003-2004 All rights reserved
Wavecom Confidential & Proprietary Information

This document is the sole and exclusive property of WAVECOM. Not to be distributed or divulged without prior written agreement.

### 1.11.2 Call forwarding

Please refer to SC and BS values below in this paragraph.

| | |
|---|---|
| Activate | ***SC#** |
| *or* | ***SC**BS#** |
| Register and activate | ****SC*** *PhoneNumber***#** |
| *or* | ****SC*** *PhoneNumber****BS#** |
| *or* | ****SC*** *PhoneNumber****[BS]*T#** |
| *or* | ***SC*** *PhoneNumber***#** |
| *or* | ***SC*** *PhoneNumber****BS#** |
| *or* | ***SC*** *PhoneNumber****[BS]*T#** |
| Check status | ***#SC#** |
| *or* | ***#SC**BS#** |
| Deactivate | **#SC#** |
| *or* | **#SC**BS#** |
| Unregister and deactivate | **##SC#** |
| *or* | **##SC**BS#** |

| Service Codes (SC) | |
|---|---|
| **002** | all call forwarding |
| **004** | all conditional call forwarding |
| **21** | call forwarding unconditional |
| **61** | call forwarding on no answer |
| **62** | call forwarding on not reachable |
| **67** | call busy |

| Network Service Codes (BS) | |
|---|---|
| *No code* | All tele and bearer services |
| **10** | All tele-services |
| **11** | Telephony |
| **12** | All data tele-services |
| **13** | Fax services |
| **16** | Short Message Services |
| **17** | Voice Group Call Service |
| **18** | Voice Broadcast Service |
| **19** | All tele-services except SMS |
| **20** | All bearer services |
| **21** | All asynchronous services |
| **22** | All synchronous services |
| **24** | All data circuit synchronous |
| **25** | All data circuit asynchronous |

Note: The no-reply condition timer (T), is only used for SC = 002, 004 or 61.

© 2003-2004 All rights reserved
Wavecom Confidential & Proprietary Information

This document is the sole and exclusive property of WAVECOM. Not to be distributed or divulged without prior written agreement.

### 1.11.3 Call barring

Please refer to SC values below in this paragraph. BS values are the same as above, see §1.11.2.

| | |
|---|---|
| Activate | ***SC*** *Password*#* |
| *or* | ***SC*** *Password**BS#* |
| Check status | ***#SC#*** |
| *or* | ***#SC**BS#*** |
| Deactivate | ***#SC*** *Password*#* |
| *or* | ***#SC*** *Password**BS#* |
| Change password for call barring | ****03*330*** *OLDPWD** *NEWPWD** *NEWPWD*#* |
| *or* | ****03**** *OLDPWD** *NEWPWD** *NEWPWD*#* |
| *or* | ****03*330*** *OLDPWD***NEWPWD***NEWPWD*#* |
| *or* | ****03**** *OLDPWD** *NEWPWD** *NEWPWD*#* |

| Service Codes (SC) | |
|---|---|
| **33** | call barring of outgoing call |
| **330** | all barring service (only for deactivation) |
| **331** | call barring of outgoing international call |
| **332** | call barring of outgoing international calls except to HPLMN |
| **333** | all outgoing barring service (only for deactivation) |
| **35** | call barring of incoming calls |
| **351** | call barring of incoming calls if roaming |
| **353** | all incoming barring service (only for deactivation) |

### 1.11.4 Call waiting

BS values are the same as above, see §1.11.2.

| | |
|---|---|
| Activate | ***43*BS#*** |
| Check status | ***#43*BS#*** |
| Deactivate | ***#43*BS#*** |

wavecom © 2003-2004 All rights reserved
Wavecom Confidential & Proprietary Information

This document is the sole and exclusive property of WAVECOM. Not to be distributed or divulged without prior written agreement.

### 1.11.5 Number presentation

| | |
|---|---|
| CLIP check status | ***#30#** |
| CLIR check status | ***#31#** |
| Suppress CLIR for a voice call | ***31#***PhoneNumber* |
| Invoke CLIR for a voice call | **#31#***PhoneNumber* |
| COLP check status | ***#76#** |

© 2003-2004 All rights reserved
Wavecom Confidential & Proprietary Information
This document is the sole and exclusive property of WAVECOM. Not to be distributed or divulged without prior written agreement.

## 1.12 Operator names

This list is extracted from the SE13 (May 11th 2004 edition) and the NAPRD_10_2_6_2 documents. Note that Country Initials may vary for the same MCC (Mobile Country Code) without any impact. The following list is sorted by MCC and MNC.

| Country Initials | MCC | MNC | Preferred Presentation of Country Initials and Mobile Network Name | Abbreviated Mobile Network Name |
|---|---|---|---|---|
| GRC | 202 | 1 | GR COSMOTE | C-OTE |
| GRC | 202 | 5 | vodafone GR | voda GR |
| GRC | 202 | 9 | GR Q-TELECOM | Q-TELCOM |
| GRC | 202 | 10 | TIM GR | TIM |
| NLD | 204 | 4 | vodafone NL | voda NL |
| NLD | 204 | 8 | NL KPN | NL KPN |
| NLD | 204 | 12 | NL Telfort | NL Tlfrt |
| NLD | 204 | 16 | T-Mobile NL | TMO NL |
| NLD | 204 | 20 | Orange NL | Orange |
| BEL | 206 | 1 | BEL PROXIMUS | PROXI |
| BEL | 206 | 10 | B mobistar | mobi* |
| BEL | 206 | 20 | BASE | BASE |
| FRA | 208 | 1 | Orange F | Orange |
| FRA | 208 | 3 | Orange | Orange |
| FRA | 208 | 10 | F SFR | SFR |
| FRA | 208 | 20 | F - BOUYGUES TELECOM | BYTEL |
| AND | 213 | 3 | STA-MOBILAND | M-AND |
| ESP | 214 | 1 | vodafone ES | voda ES |
| ESP | 214 | 3 | E AMENA | AMENA |
| ESP | 214 | 7 | MOVISTAR | MSTAR |
| HUN | 216 | 1 | H PANNON GSM | PANNON |
| HUN | 216 | 30 | T-Mobile H | TMO H |
| HUN | 216 | 70 | vodafone HU | voda HU |
| BIH | 218 | 3 | BA-ERONET | ERONET |
| BIH | 218 | 5 | MOBI'S | MOBI'S |
| BIH | 218 | 90 | BH GSMBIH | GSMBIH |
| HRV | 219 | 1 | HTmobile HR | HTmobile |
| HRV | 219 | 10 | HR VIP | VIP |
| SCG | 220 | 1 | YU MOBTEL | MOBTEL |
| SCG | 220 | 2 | ProMonte | ProMonte |
| SCG | 220 | 3 | YUG 03 | SCGTS |
| SCG | 220 | 4 | MONET | MONET |
| ITA | 222 | 1 | I TIM | TIM |
| ITA | 222 | 10 | vodafone IT | voda IT |

wavecom © 2003-2004 All rights reserved
Wavecom Confidential & Proprietary Information

This document is the sole and exclusive property of WAVECOM. Not to be distributed or divulged without prior written agreement.

| Country Initials | MCC | MNC | Preferred Presentation of Country Initials and Mobile Network Name | Abbreviated Mobile Network Name |
|---|---|---|---|---|
| ITA | 222 | 88 | I WIND | I WIND |
| ITA | 222 | 99 | 3 ITA | 3 ITA |
| ROU | 226 | 1 | RO CONNEX | CONNEX |
| ROU | 226 | 3 | RO Cosmorom | Cosmorom |
| ROU | 226 | 10 | RO ORANGE | ORANGE |
| CHE | 228 | 1 | SWISS GSM | SWISS |
| CHE | 228 | 2 | sunrise | sunrise |
| CHE | 228 | 3 | orange CH | ORANGE |
| CZE | 230 | 1 | T-Mobile CZ | TMO CZ |
| CZE | 230 | 2 | EUROTEL - CZ | ET - CZ |
| CZE | 230 | 3 | OSKAR | OSKAR |
| SVK | 231 | 1 | Orange SK | Orange |
| SVK | 231 | 2 | EUROTEL-SK | ET-SK |
| AUT | 232 | 1 | A1 | A1 |
| AUT | 232 | 3 | T-Mobile A | TMO A |
| AUT | 232 | 5 | one | one |
| AUT | 232 | 7 | A tele.ring | telering |
| AUT | 232 | 10 | 3 AT | 3 AT |
| GBR | 234 | 10 | O2 - UK | O2 -UK |
| GBR | 234 | 15 | vodafone UK | voda UK |
| GBR | 234 | 20 | 3 UK | 3 UK |
| GBR | 234 | 30 | T-Mobile UK | TMO UK |
| GBR | 234 | 31 | T-Mobile UK | TMO UK |
| GBR | 234 | 32 | T-Mobile UK | TMO UK |
| GBR | 234 | 33 | Orange | Orange |
| GBR | 234 | 50 | JT GSM | JT GSM |
| GBR | 234 | 55 | Cable & Wireless Guernsey | C&W |
| GBR | 234 | 58 | Manx Pronto | Pronto |
| DNK | 238 | 1 | TDC MOBIL | DK TDC |
| DNK | 238 | 2 | DK SONOFON | SONO |
| DNK | 238 | 6 | 3 DK | 3 DK |
| DNK | 238 | 20 | TELIA DK | TELIA |
| DNK | 238 | 30 | Orange | Orange |
| SWE | 240 | 1 | TELIA S | TELIA |
| SWE | 240 | 2 | 3 SE | 3 SE |
| SWE | 240 | 4 | SWEDEN | SWE |
| SWE | 240 | 5 | Sweden 3G | Sweden3G |
| SWE | 240 | 7 | S COMVIQ | IQ |
| SWE | 240 | 8 | vodafone SE | voda SE |
| SWE | 240 | 10 | SpringMobil SE | Spring |
| NOR | 242 | 1 | N Telenor | TELENOR |
| NOR | 242 | 2 | N NetCom GSM | N COM |

wavecom © 2003-2004 All rights reserved
Wavecom Confidential & Proprietary Information

This document is the sole and exclusive property of WAVECOM. Not to be distributed or divulged without prior written agreement.

| Country Initials | MCC | MNC | Preferred Presentation of Country Initials and Mobile Network Name | Abbreviated Mobile Network Name |
|---|---|---|---|---|
| FIN | 244 | 3 | FINNET | FINNET |
| FIN | 244 | 5 | FI elisa | elisa |
| FIN | 244 | 12 | FINNET | FINNET |
| FIN | 244 | 14 | FI AMT | FI AMT |
| FIN | 244 | 91 | FI SONERA | SONERA |
| LTU | 246 | 1 | OMNITEL LT | OMT |
| LTU | 246 | 2 | LT BITE GSM | BITE |
| LTU | 246 | 3 | TELE2 | TELE2 |
| LVA | 247 | 1 | LV LMT GSM | LMT GSM |
| LVA | 247 | 2 | LV TELE2 | TELE2 |
| EST | 248 | 1 | EE EMT GSM | EMT |
| EST | 248 | 2 | EE RLE | RLE |
| EST | 248 | 3 | TELE2 | TELE2 |
| RUS | 250 | 1 | MTS-RUS | MTS |
| RUS | 250 | 2 | MegaFon RUS | MegaFon |
| RUS | 250 | 4 | SIBCHALLENGE RUS | RUS_SCN |
| RUS | 250 | 5 | SCS RUS | SCS |
| RUS | 250 | 7 | RUS SMARTS | SMARTS |
| RUS | 250 | 10 | RUS DTC | DTC |
| RUS | 250 | 11 | ORENSOT | ORENSOT |
| RUS | 250 | 12 | RF FAR EAST | RF FEast |
| RUS | 250 | 13 | RUS Kuban-GSM | KUGSM |
| RUS | 250 | 14 | RUS Di-ex | Di-ex |
| RUS | 250 | 15 | RUS SMARTS | SMARTS |
| RUS | 250 | 16 | RUS16 | NTC |
| RUS | 250 | 17 | RUS 17 | ERMAK |
| RUS | 250 | 19 | RUS_BASHCELL | BASHCELL |
| RUS | 250 | 20 | RUS 20 | MOTIV |
| RUS | 250 | 28 | Bee Line | Bee Line |
| RUS | 250 | 39 | Uraltel | RUS39 |
| RUS | 250 | 44 | RUS North Caucasian GSM | NC-GSM |
| RUS | 250 | 92 | Primetelefone RUS | Primtel |
| RUS | 250 | 99 | Bee Line | Bee Line |
| UKR | 255 | 1 | UA UMC | UMC |
| UKR | 255 | 2 | UKR-WellCOM | WellCOM |
| UKR | 255 | 3 | UA-KYIVSTAR | UA-KS |
| UKR | 255 | 5 | UA-GT | GT |
| BLR | 257 | 1 | BY VELCOM | VELCOM |
| BLR | 257 | 2 | MTS BY | MTS |
| MDA | 259 | 1 | MD VOXTEL | VOXTEL |
| MDA | 259 | 2 | MD MOLDCELL | MDCELL |
| POL | 260 | 1 | Plus GSM | PLUS |

wavecom © 2003-2004 All rights reserved
Wavecom Confidential & Proprietary Information

This document is the sole and exclusive property of WAVECOM. Not to be distributed or divulged without prior written agreement.

| Country Initials | MCC | MNC | Preferred Presentation of Country Initials and Mobile Network Name | Abbreviated Mobile Network Name |
|---|---|---|---|---|
| POL | 260 | 2 | Era | Era |
| POL | 260 | 3 | PL IDEA | IDEA |
| DEU | 262 | 1 | T-Mobile D | TMO D |
| DEU | 262 | 2 | Vodafone.de | voda DE |
| DEU | 262 | 3 | E-Plus | E-Plus |
| DEU | 262 | 7 | o2 - de | o2 - de |
| GIB | 266 | 1 | GIBTEL GSM | GIBTEL |
| PRT | 268 | 1 | vodafone P | voda P |
| PRT | 268 | 3 | P OPTIMUS | OPTIM |
| PRT | 268 | 6 | P TMN | TMN |
| LUX | 270 | 1 | L LUXGSM | LUXGSM |
| LUX | 270 | 77 | L TANGO | TANGO |
| LUX | 270 | 99 | L-VOX.mobile | VOX.LU |
| IRL | 272 | 1 | vodafone IE | voda IE |
| IRL | 272 | 2 | 02 - IRL | 02 -IRL |
| IRL | 272 | 3 | IRL - METEOR | METEOR |
| ISL | 274 | 1 | IS SIMINN | SIMINN |
| ISL | 274 | 2 | Og Vodafone | Vodafone |
| ISL | 274 | 3 | Og Vodafone | Vodafone |
| ISL | 274 | 4 | Viking | Viking |
| ALB | 276 | 1 | AMC - AL | A M C |
| ALB | 276 | 2 | vodafone AL | voda AL |
| MLT | 278 | 1 | vodafone MT | voda MT |
| MLT | 278 | 21 | go mobile | gomobile |
| CYP | 280 | 1 | CY CYTAGSM | CY-GSM |
| CYP | 280 | 10 | areeba | areeba |
| GEO | 282 | 1 | GEO-GEOCELL | GCELL |
| GEO | 282 | 2 | MAGTI-GSM-GEO | MAGTI |
| ARM | 283 | 1 | RA-ARMGSM | ARMMO1 |
| ARM | 283 | 4 | RA 04 | RA 04 |
| BGR | 284 | 1 | M-TEL GSM BG | M-TEL |
| BGR | 284 | 5 | BG GLOBUL | GLOBUL |
| TUR | 286 | 1 | TR TURKCELL | TCELL |
| TUR | 286 | 2 | TR TELSIM | TELSIM |
| TUR | 286 | 3 | TR ARIA | ARIA |
| TUR | 286 | 4 | TR AYCELL | AYCELL |
| FRO | 288 | 1 | Føroya Tele | FT-GSM |
| FRO | 288 | 2 | KALL | KALL |
| GRL | 290 | 1 | TELE Greenland | TELE GRL |
| SVN | 293 | 40 | SI vodafone | SI voda |
| SVN | 293 | 41 | SI MOBITEL GSM | SI-GSM |
| SVN | 293 | 70 | SI VEGA 070 | VEGA 070 |

wavecom © 2003-2004 All rights reserved
Wavecom Confidential & Proprietary Information

This document is the sole and exclusive property of WAVECOM. Not to be distributed or divulged without prior written agreement.

| Country Initials | MCC | MNC | Preferred Presentation of Country Initials and Mobile Network Name | Abbreviated Mobile Network Name |
|---|---|---|---|---|
| MKD | 294 | 1 | MKD-MOBIMAK | MOBI-M |
| MKD | 294 | 2 | MKD COSMOFON | COSMOFON |
| LIE | 295 | 1 | FL GSM | FLGSM |
| LIE | 295 | 2 | Orange FL | OFL |
| LIE | 295 | 5 | FL1 | FL1 |
| LIE | 295 | 77 | LI TANGO | TANGO |
| CAN | 302 | 370 | Fido | Fido |
| CAN | 302 | 720 | Rogers AT&T Wireless | ROGERS |
| USA | 310 | 20 | Union Telephone | Union Tel |
| USA | 310 | 26 | T-Mobile | TMO |
| USA | 310 | 30 | Centennial Wireless | Centennial |
| USA | 310 | 31 | T-Mobile | TMO |
| USA | 310 | 40 | Cellular One | Cellular One |
| USA | 310 | 50 | DIGICEL | JAM DC |
| USA | 310 | 70 | Highland Cellular | Highland |
| USA | 310 | 80 | Corr Wireless | Corr |
| USA | 310 | 100 | Plateau Wireless | Plateau |
| USA | 310 | 150 | Cingular Wireless | Cingular |
| USA | 310 | 160 | T-Mobile | T-Mobile |
| USA | 310 | 170 | Cingular Wireless | Cingular |
| USA | 310 | 180 | West Central Wireless | West Central |
| USA | 310 | 190 | Alaska Wireless | Alaska Wireless |
| USA | 310 | 200 | T-Mobile | T-Mobile |
| USA | 310 | 210 | T-Mobile | T-Mobile |
| USA | 310 | 220 | T-Mobile | T-Mobile |
| USA | 310 | 230 | T-Mobile | T-Mobile |
| USA | 310 | 240 | T-Mobile | T-Mobile |
| USA | 310 | 250 | T-Mobile | T-Mobile |
| USA | 310 | 260 | T-Mobile | T-Mobile |
| USA | 310 | 270 | T-Mobile | T-Mobile |
| USA | 310 | 310 | T-Mobile | T-Mobile |
| USA | 310 | 311 | FARMERS | FARMERS |
| USA | 310 | 320 | USA - CellularOne | Cell |
| USA | 310 | 340 | WestLink Comm | WestLink |
| USA | 310 | 350 | Carolina Phone | Carolina |
| USA | 310 | 380 | AT&T Wireless | AT&T |
| USA | 310 | 390 | Yorkville Telephone | Yorkville |
| USA | 310 | 410 | Cingular Wireless | Cingular |
| USA | 310 | 420 | Cincinnati Bell Wireless | CBW |
| USA | 310 | 450 | Viaero Wireless | Viaero |
| USA | 310 | 460 | USA ONELINK | ONELINK |
| USA | 310 | 490 | SunCom | SunCom |

© 2003-2004 All rights reserved
Wavecom Confidential & Proprietary Information

This document is the sole and exclusive property of WAVECOM. Not to be distributed or divulged without prior written agreement.

| Country Initials | MCC | MNC | Preferred Presentation of Country Initials and Mobile Network Name | Abbreviated Mobile Network Name |
|---|---|---|---|---|
| USA | 310 | 500 | PSC Wireless | PSC |
| USA | 310 | 530 | West Virginia Wireless | WVW |
| USA | 310 | 560 | Cellular One DCS | Cell One |
| USA | 310 | 580 | T-Mobile | T-Mobile |
| USA | 310 | 590 | USA - Extended Area | ROAMING |
| USA | 310 | 610 | Epic Touch | EpicTouch |
| USA | 310 | 630 | AmeriLink PCS | AmeriLink |
| USA | 310 | 640 | Einstein PCS | Einstein |
| USA | 310 | 660 | T-Mobile | T-Mobile |
| USA | 310 | 670 | Wireless 2000 PCS | W 2000 PCS |
| USA | 310 | 680 | NPI Wireless | NPI |
| USA | 310 | 690 | Immix Wireless | IMMIX |
| USA | 310 | 740 | Telemetrix | Telemetrix |
| USA | 310 | 760 | PTSI | PTSI |
| USA | 310 | 770 | IWS | IWS |
| USA | 310 | 780 | AirLink PCS | AirLink |
| USA | 310 | 790 | Pinpoint | Pinpoint |
| USA | 310 | 800 | T-Mobile | T-Mobile |
| USA | 310 | 870 | US | PACE |
| USA | 310 | 880 | USAACSI | ACSIAC |
| USA | 310 | 910 | USAFC | FCSI |
| USA | 310 | 940 | Digital Cellular | DCT |
| USA | 310 | 950 | USA XIT Cellular | XIT |
| USA | 310 | 980 | AT&T Wireless | AT&T |
| USA | 311 | 0 | Wilkes USA | WILKES |
| USA | 311 | 1 | Wilkes USA | WILKES |
| USA | 311 | 5 | Wilkes USA | WILKES |
| USA | 311 | 30 | Indigo | Indigo |
| USA | 311 | 70 | USAEC | EASTER |
| USA | 311 | 80 | Pine Cellular | PINECell |
| USA | 311 | 110 | High Plains | HPW |
| USA | 311 | 140 | Sprocket | Sprocket |
| USA | 311 | 160 | EMW | EMW |
| USA | 311 | 170 | PetroCom | PetroCom |
| USA | 311 | 190 | USAC1ECI | C1ECI |
| USA | 332 | 11 | Blue Sky | Blue Sky |
| MEX | 334 | 3 | MX MOVISTAR GSM | MOVISTAR |
| MEX | 334 | 20 | Telcel GSM | TELCEL |
| JAM | 338 | 5 | JM DIGICEL | DIGICEL |
| JAM | 338 | 180 | C&W | C&W |
| FRA | 340 | 1 | F-Orange | Orange |
| GLP | 340 | 8 | AMIGO | AMIGO |

wavecom © 2003-2004 All rights reserved
Wavecom Confidential & Proprietary Information

This document is the sole and exclusive property of WAVECOM. Not to be distributed or divulged without prior written agreement.

| Country Initials | MCC | MNC | Preferred Presentation of Country Initials and Mobile Network Name | Abbreviated Mobile Network Name |
|---|---|---|---|---|
| FRA | 340 | 20 | BOUYGTEL-C | BOUYG-C |
| BRB | 342 | 50 | JM Digicel | Digicel |
| BRB | 342 | 600 | C&W | C&W |
| BRB | 342 | 810 | AT&T Wireless | AT&T |
| ATG | 344 | 30 | APUA-PCS ANTIGUA | APUA-PCS |
| ATG | 344 | 920 | C&W | C&W |
| ATG | 344 | 930 | AT&T Wireless | AT&T |
| CYM | 346 | 140 | C&W | C&W |
| VGB | 348 | 570 | CCT Boatphone | CCTBVI |
| BMU | 350 | 2 | BTC MOBILITY LTD. | MOBILITY |
| BMU | 350 | 10 | AT&T Wireless | AT&T |
| GRD | 352 | 30 | AT&T Wireless | AT&T |
| GRD | 352 | 50 | Digicel | DIGICEL |
| GND | 352 | 110 | C&W | C&W |
| GRD | 352 | 130 | TWTCGN | TWTCGN |
| MS | 354 | 860 | C&W | C&W |
| KNA | 356 | 110 | C&W | C&W |
| LCA | 358 | 30 | AT&T Wireless | AT&T |
| SLU | 358 | 110 | C&W | C&W |
| VCT | 360 | 10 | AT&T Wireless | AT&T |
| VCT | 360 | 110 | C&W | C&W |
| ANT | 362 | 51 | Telcell GSM | Telcell |
| ANT | 362 | 69 | ANT CURACAO TELECOM GSM | CT GSM |
| ANT | 362 | 91 | UTS Wireless Curacao N.V. | UTS |
| ABW | 363 | 1 | SETAR GSM | SETARGSM |
| BHS | 364 | 39 | BaTelCell | BaTelCel |
| AIA | 365 | 840 | C&W | C&W |
| DMA | 366 | 20 | AT&T Wireless | AT&T |
| DMA | 366 | 110 | C&W | C&W |
| CUB | 368 | 1 | CU/C_COM | C_COM |
| DO | 370 | 1 | ORANGE | ORANGE |
| TTO | 374 | 12 | TSTT | TSTT |
| TCA | 376 | 350 | C&W | C&W |
| AZE | 400 | 1 | AZE - AZERCELL GSM | ACELL |
| AZE | 400 | 2 | BAKCELL GSM 2000 | BKCELL |
| KAZ | 401 | 1 | KZ K-MOBILE | K-MOBILE |
| KAZ | 401 | 2 | KZ KCELL | KCELL |
| BTN | 402 | 11 | BT B-Mobile | B-Mobile |
| IND | 404 | 1 | Hutch | Hutch |
| IND | 404 | 2 | AirTel | AirTel |
| IND | 404 | 3 | AirTel | AirTel |
| IND | 404 | 4 | IDEA | IDEA |

© 2003-2004 All rights reserved
Wavecom Confidential & Proprietary Information
This document is the sole and exclusive property of WAVECOM. Not to be distributed or divulged without prior written agreement.

| Country Initials | MCC | MNC | Preferred Presentation of Country Initials and Mobile Network Name | Abbreviated Mobile Network Name |
|---|---|---|---|---|
| IND | 404 | 5 | Hutch | Hutch |
| IND | 404 | 7 | IDEA | IDEA |
| IND | 404 | 10 | AirTel | AirTel |
| IND | 404 | 11 | Hutch | Hutch |
| IND | 404 | 12 | INDEH | ESCOTEL |
| IND | 404 | 13 | Hutch | Hutch |
| IND | 404 | 14 | INA SPICE | SPICE |
| IND | 404 | 15 | Hutch | Hutch |
| IND | 404 | 19 | INDEK | ESCOTEL |
| IND | 404 | 20 | Orange | Orange |
| IND | 404 | 21 | BPL MOBILE | BPL MOBILE |
| IND | 404 | 22 | IDEA | IDEA |
| IND | 404 | 24 | IDEA | IDEA |
| IND | 404 | 27 | BPL MOBILE | BPL MOBILE |
| IND | 404 | 30 | Hutch | Hutch |
| IND | 404 | 31 | AirTel | AirTel |
| IND | 404 | 34 | BSNL MOBILE | CellOne |
| IND | 404 | 38 | BSNL MOBILE | CellOne |
| IND | 404 | 40 | IND AIRTEL | AIRTEL |
| IND | 404 | 41 | INA RPG | RPG |
| IND | 404 | 42 | INA AIRCEL | AIRCEL |
| IND | 404 | 43 | BPL MOBILE | BPL MOB |
| IND | 404 | 44 | INA SPICE | SPICE |
| IND | 404 | 45 | AirTel | AirTel |
| IND | 404 | 46 | BPL MOBILE | BPL MOB |
| IND | 404 | 49 | AirTel | AirTel |
| IND | 404 | 51 | BSNL MOBILE | CellOne |
| IND | 404 | 53 | BSNL MOBILE | CellOne |
| IND | 404 | 54 | BSNL MOBILE | CellOne |
| IND | 404 | 55 | BSNL MOBILE | CellOne |
| IND | 404 | 56 | INDEU | ESCOTEL |
| IND | 404 | 57 | BSNL MOBILE | CellOne |
| IND | 404 | 58 | BSNL MOBILE | CellOne |
| IND | 404 | 59 | BSNL MOBILE | CellOne |
| IND | 404 | 60 | Hutch | Hutch |
| IND | 404 | 62 | BSNL MOBILE | CellOne |
| IND | 404 | 64 | BSNL MOBILE | CellOne |
| IND | 404 | 66 | BSNL MOBILE | CellOne |
| IND | 404 | 68 | IN-DOLPHIN | DOLPHIN |
| IND | 404 | 69 | IN-DOLPHIN | DOLPHIN |
| IND | 404 | 70 | INDH1 | Oasis |
| IND | 404 | 71 | BSNL MOBILE | CellOne |

© 2003-2004 All rights reserved
Wavecom Confidential & Proprietary Information

This document is the sole and exclusive property of WAVECOM. Not to be distributed or divulged without prior written agreement.

| Country Initials | MCC | MNC | Preferred Presentation of Country Initials and Mobile Network Name | Abbreviated Mobile Network Name |
|---|---|---|---|---|
| IND | 404 | 72 | BSNL MOBILE | CellOne |
| IND | 404 | 73 | BSNL MOBILE | CellOne |
| IND | 404 | 74 | BSNL MOBILE | CellOne |
| IND | 404 | 75 | BSNL MOBILE | CellOne |
| IND | 404 | 76 | BSNL MOBILE | CellOne |
| IND | 404 | 77 | BSNL MOBILE | CellOne |
| IND | 404 | 78 | IDEA | IDEA |
| IND | 404 | 79 | BSNL MOBILE | CellOne |
| IND | 404 | 80 | BSNL MOBILE | CellOne |
| IND | 404 | 81 | BSNL MOBILE | CellOne |
| IND | 404 | 84 | Hutch | Hutch |
| IND | 404 | 86 | Hutch | Hutch |
| IND | 404 | 88 | Hutch | Hutch |
| IND | 404 | 90 | AirTel | AirTel |
| IND | 404 | 92 | AirTel | AirTel |
| IND | 404 | 93 | AirTel | AirTel |
| IND | 404 | 94 | AirTel | AirTel |
| IND | 404 | 95 | AirTel | AirTel |
| IND | 404 | 96 | AirTel | AirTel |
| IND | 404 | 97 | AirTel | AirTel |
| IND | 404 | 98 | AirTel | AirTel |
| PAK | 410 | 1 | PK MK | PMCL |
| PAK | 410 | 3 | PK-UFONE | UFONE |
| PAK | 410 | 4 | PAK - PL | PAKTEL |
| AFG | 412 | 1 | AF AWCC | AWCC |
| AFG | 412 | 20 | AF TDCA | TDCA |
| SRI | 413 | 1 | Mobitel | MOBITEL |
| SRI | 413 | 2 | SRI DIALOG | DIALOG |
| SRI | 413 | 3 | SRI - CELLTEL | CELLTEL |
| MMR | 414 | 1 | MM 900 | MPTGSM |
| LBN | 415 | 1 | RL Cellis | CLLIS |
| LBN | 415 | 3 | RL LibanCell | LibCL |
| JOR | 416 | 1 | Fastlink | FSTLNK |
| JOR | 416 | 77 | JO MobCom | MobCom |
| SYR | 417 | 1 | SYRIATEL | SYRIATEL |
| SYR | 417 | 2 | 94 SYRIA | 94 SYRIA |
| SYR | 417 | 9 | SYR MOBILE SYR | MOBILE |
| IRQ | 418 | 0 | ASIACELL | ASIACELL |
| IRQ | 418 | 2 | SanaTel | SanaTel |
| IRQ | 418 | 5 | ASIACELL | ASIACELL |
| IRQ | 418 | 8 | SanaTel | SanaTel |
| IRQ | 418 | 20 | Atheer Iraq | ATHEER |

wavecom © 2003-2004 All rights reserved
Wavecom Confidential & Proprietary Information

This document is the sole and exclusive property of WAVECOM. Not to be distributed or divulged without prior written agreement.

| Country Initials | MCC | MNC | Preferred Presentation of Country Initials and Mobile Network Name | Abbreviated Mobile Network Name |
|---|---|---|---|---|
| IRQ | 418 | 30 | IRAQNA | IRAQNA |
| KWT | 419 | 2 | KT MTCNet | MTC |
| KWT | 419 | 3 | KT WATANIYA | WATANIYA |
| KSA | 420 | 1 | ALJAWAL | KSA |
| YEM | 421 | 1 | SabaFon | SABAFON |
| YEM | 421 | 2 | SPACETEL | SPACETEL |
| OMN | 422 | 2 | OMAN MOBILE | OMAN |
| UAE | 424 | 2 | UAE ETISALAT | ETSLT |
| ISR | 425 | 1 | IL ORANGE | ORANGE |
| ISR | 425 | 2 | IL Cellcom | Cellcom |
| ISR | 425 | 5 | JAWWAL-PALESTINE | JAWWAL |
| BHR | 426 | 1 | BATELCO | BATELCO |
| BHR | 426 | 2 | MTC VODAFONE BH | MTC-VFBH |
| QAT | 427 | 1 | QAT QATARNET | Q-NET |
| MNG | 428 | 99 | MN MobiCom | MobiCom |
| IRN | 432 | 11 | IR-TCI | 432 11 |
| IRN | 432 | 14 | IR KISH | KIFZO |
| IRN | 432 | 19 | IR MTCE | MTCE |
| UZB | 434 | 2 | UZMACOM | UZMGSM |
| UZB | 434 | 4 | UZB DAEWOO-GSM | DW-GSM |
| UZB | 434 | 5 | UZB CSOCOM GSM | COSCOM |
| UZB | 434 | 7 | UZB-UZD | UZDGSM |
| TJK | 436 | 1 | Somoncom | Somoncom |
| TJK | 436 | 2 | Indigo-T | INDIGO |
| TJK | 436 | 3 | TJK MLT | MLT |
| TJK | 436 | 4 | Babilon-M | Babilon |
| TJK | 436 | 5 | TJT - Tajik Tel | TajikTel |
| KGZ | 437 | 1 | BITEL KGZ | BITEL |
| JPN | 440 | 10 | JP DoCoMo | DoCoMo |
| JPN | 440 | 20 | Vodafone JP | Voda JP |
| KOR | 450 | 2 | KR KTF | KTF |
| KOR | 450 | 8 | KR KTF | KTF |
| VNM | 452 | 1 | VN MOBIFONE | VMS |
| VNM | 452 | 2 | VN VINAPHONE | GPC |
| VNM | 452 | 4 | VNM and VIETTEL | VIETTEL |
| HKG | 454 | 0 | CSL | CSL |
| HKG | 454 | 3 | 3 HK | 3 |
| HKG | 454 | 4 | HK ORANGE | ORANGE |
| HKG | 454 | 6 | SmarTone | SmarTone |
| HKG | 454 | 10 | HK NEW WORLD | NWPCS |
| HKG | 454 | 12 | HK PEOPLES | PEOPLES |
| HKG | 454 | 15 | SmarTone 3G | SMC 3G |

wavecom © 2003-2004 All rights reserved
Wavecom Confidential & Proprietary Information

This document is the sole and exclusive property of WAVECOM. Not to be distributed or divulged without prior written agreement.

| Country Initials | MCC | MNC | Preferred Presentation of Country Initials and Mobile Network Name | Abbreviated Mobile Network Name |
|---|---|---|---|---|
| HKG | 454 | 16 | HK SUNDAY | SUNDAY |
| MAC | 455 | 0 | Macau SMC | SmarTone |
| MAC | 455 | 1 | MAC-CTMGSM | CTMGSM |
| MAC | 455 | 3 | Hutchison MAC | HT Macau |
| KHM | 456 | 1 | MOBITEL - KHM | MT-KHM |
| KHM | 456 | 2 | KHM-Hello GSM | KHM-SM |
| KHM | 456 | 18 | CAMBODIA SHINAWATRA | CAMSHIN |
| LAO | 457 | 1 | LAO GSM | LAO GSM |
| LAO | 457 | 2 | ETL MOBILE NETWORK | ETLMNW |
| LAO | 457 | 3 | 45703 | LATMOBIL |
| LAO | 457 | 8 | TANGO LAO | TANGO |
| CHN | 460 | 0 | CHINA MOBILE | CMCC |
| CHN | 460 | 1 | CHN-CUGSM | CU-GSM |
| TWN | 466 | 1 | Far EasTone | FET |
| TWN | 466 | 6 | TWN Tuntex GSM 1800 | TUNTEX |
| TWN | 466 | 68 | ACeS | ACeS |
| TWN | 466 | 88 | KGT-Online | KGT |
| TWN | 466 | 89 | T3G | T3G |
| TWN | 466 | 92 | Chunghwa | CHT |
| TWN | 466 | 93 | TWN MOBITAI | TW MOB |
| TWN | 466 | 97 | TWN GSM 1800 | TCC |
| TWN | 466 | 99 | TransAsia | TransAsi |
| PRK | 467 | 3 | KP SUN | SUNNET |
| BGD | 470 | 1 | BGD-GP | GP |
| BGD | 470 | 2 | BGD AKTEL | AKTEL |
| BGD | 470 | 3 | BD ShebaWorld | SHEBA |
| MDV | 472 | 1 | MV DHIMOBILE | D-MOBILE |
| MYS | 502 | 12 | MY MAXIS | MY MAXIS |
| MYS | 502 | 16 | DiGi | DiGi |
| MYS | 502 | 19 | MY CELCOM | CELCOM |
| AUS | 505 | 1 | Telstra Mobile | Telstra |
| AUS | 505 | 2 | YES OPTUS | Optus |
| AUS | 505 | 3 | vodafone AU | voda AU |
| AUS | 505 | 6 | 3 AUS | 3 AUS |
| IDN | 510 | 0 | ACeS | ACeS |
| IDN | 510 | 1 | IND INDOSAT | INDOSAT |
| IDN | 510 | 8 | LIPPO TEL | LIPPOTEL |
| IDN | 510 | 10 | IND TELKOMSEL | T-SEL |
| IDN | 510 | 11 | IND - Excelcom | proXL |
| IDN | 510 | 21 | IND INDOSAT | INDOSAT |
| TLS | 514 | 2 | TLS-TT | TT |
| PHL | 515 | 1 | ISLACOM | ISLACOM |

wavecom © 2003-2004 All rights reserved
Wavecom Confidential & Proprietary Information

This document is the sole and exclusive property of WAVECOM. Not to be distributed or divulged without prior written agreement.

| Country Initials | MCC | MNC | Preferred Presentation of Country Initials and Mobile Network Name | Abbreviated Mobile Network Name |
|---|---|---|---|---|
| PHL | 515 | 2 | Globe Telecom-PH | GLOBE |
| PHL | 515 | 3 | SMART | SMART |
| PHL | 515 | 5 | PH Sun Cellular | SUN |
| PHL | 515 | 11 | ACeS | ACeS |
| THA | 520 | 1 | TH GSM | TH GSM |
| THA | 520 | 15 | TH ACT 1900 | ACT-1900 |
| THA | 520 | 18 | TH-DTAC | DTAC |
| THA | 520 | 20 | ACeS | ACeS |
| THA | 520 | 23 | TH GSM 1800 | GSM 1800 |
| THA | 520 | 99 | Orange Th | Orange |
| SGP | 525 | 1 | SingTel | SingTel |
| SGP | 525 | 2 | SingTel-G18 | SingTel |
| SGP | 525 | 3 | SGP-M1-3GSM | M1-3GSM |
| SGP | 525 | 5 | STARHUB-SGP | STARHUB |
| NZL | 530 | 1 | vodafone NZ | voda NZ |
| PNG | 537 | 1 | PNGBMobile | BMobile |
| TON | 539 | 1 | U-CALL | U-CALL |
| VUT | 541 | 1 | VUT SMILE | SMILE |
| FJI | 542 | 1 | FJ VODAFONE | VODAFONE |
| AS | 544 | 11 | Blue Sky | Blue Sky |
| KIR | 545 | 9 | KL-Frigate | KI-FRIG |
| NCL | 546 | 1 | NCL MOBILIS | MOBNCL |
| FRA | 547 | 20 | F-VINI | VINI |
| COK | 548 | 1 | CK KOKANET | KOKANET |
| FSM | 550 | 1 | FSM Telecom | FSMTC |
| EGY | 602 | 1 | EGY MobiNiL | MobiNiL |
| EGY | 602 | 2 | vodafone EG | voda EG |
| DZA | 603 | 1 | ALGERIAN MOBILE NETWORK | AMN |
| DZA | 603 | 2 | Djezzy | Djezzy |
| DZA | 603 | 3 | DZA-WTA | WTA |
| MOR | 604 | 0 | MOR MEDITEL | MEDITEL |
| MOR | 604 | 1 | MOR IAM | IAM |
| TUN | 605 | 2 | TUNISIE TELECOM | TUNTEL |
| TUN | 605 | 3 | TUNISIANA | TUNSIANA |
| GMB | 607 | 1 | GAMCEL | GAMCEL |
| GMB | 607 | 2 | AFRICELL | AFRICELL |
| SEN | 608 | 1 | SN ALIZE | ALIZE |
| SEN | 608 | 2 | SN-SENTEL SG | SENTEL |
| MRT | 609 | 1 | MR MATTEL | MATTEL |
| MRT | 609 | 10 | MAURITEL | MAURITEL |
| MLI | 610 | 1 | MALITEL ML | MALITEL |
| MLI | 610 | 2 | IKATEL ML | IKATEL |

wavecom © 2003-2004 All rights reserved
Wavecom Confidential & Proprietary Information

This document is the sole and exclusive property of WAVECOM. Not to be distributed or divulged without prior written agreement.

| Country Initials | MCC | MNC | Preferred Presentation of Country Initials and Mobile Network Name | Abbreviated Mobile Network Name |
|---|---|---|---|---|
| GIN | 611 | 2 | GN LAGUI | LAGUI |
| CIV | 612 | 3 | Orange CI | Orange |
| CIV | 612 | 5 | TELECEL-CI | TELCEL |
| BFA | 613 | 2 | BF Celtel | celtel |
| NER | 614 | 2 | NE CELTEL | NECELTEL |
| NER | 614 | 3 | NE TELECEL | TELECEL |
| TGO | 615 | 1 | TG-TOGO CELL | TGCELL |
| BEN | 616 | 2 | TELECEL BENIN | TLCL-BEN |
| BEN | 616 | 3 | BJ BENINCELL | BENCELL |
| BEN | 616 | 4 | BELL BENIN COMMUNICATION | BBCOM |
| MRU | 617 | 1 | CELLPLUS-MRU | CELL + |
| MRU | 617 | 10 | EMTEL-MRU | EMTEL |
| LBR | 618 | 1 | LBR Lonestar Cell | LoneStar |
| LBR | 618 | 2 | LIBERCELL | LIBERCEL |
| SLE | 619 | 1 | CELTEL SL | CELTEL |
| SLE | 619 | 2 | MILLICOM SL | MILLICOM |
| GHA | 620 | 1 | GH SPACEFON | SPACE |
| GHA | 620 | 2 | GH ONEtouch | ONEtouch |
| GHA | 620 | 3 | GH-MOBITEL | mobitel |
| NGA | 621 | 20 | ECONET NG | ECONET |
| NGA | 621 | 30 | MTN - NG | MTN-NG |
| NGA | 621 | 40 | NG Mtel | Mtel |
| NGA | 621 | 50 | Glo NG | glo |
| TCD | 622 | 1 | CELTEL TCD | CELTEL |
| TCD | 622 | 2 | TD LIBERTIS | LIBERTIS |
| CMR | 624 | 1 | MTN CAM | 62401 |
| CMR | 624 | 2 | Orange CAM | Orange |
| CPV | 625 | 1 | CPV MOVEL | CMOVEL |
| STP | 626 | 1 | STP CSTmovel | CSTmovel |
| GNQ | 627 | 1 | GNQ01 | GETESA |
| GAB | 628 | 1 | LIBERTIS | LIBERTIS |
| GAB | 628 | 2 | GAB TELECEL | TELECEL |
| GAB | 628 | 3 | CELTEL GA | CELTEL |
| COG | 629 | 1 | CELTEL CD | CELTEL |
| COG | 629 | 10 | COG LIBERTIS | LIBERTIS |
| COD | 630 | 1 | VODACOM CD | VODACOM |
| COD | 630 | 2 | CELTEL RC | CELTEL |
| COD | 630 | 4 | CELLCO GSM | CELLCO |
| COD | 630 | 89 | CD OASIS | OASIS |
| AGO | 631 | 2 | UNITEL | UNITEL |
| SEZ | 633 | 1 | SEYCEL | 633-01 |
| SEZ | 633 | 10 | SEZ AIRTEL | AIRTEL |

© 2003-2004 All rights reserved
Wavecom Confidential & Proprietary Information

This document is the sole and exclusive property of WAVECOM. Not to be distributed or divulged without prior written agreement.

| Country Initials | MCC | MNC | Preferred Presentation of Country Initials and Mobile Network Name | Abbreviated Mobile Network Name |
|---|---|---|---|---|
| SUD | 634 | 1 | MobiTel SDN | MobiTel |
| RWA | 635 | 10 | R-CELL | RCELL |
| ETH | 636 | 1 | ETH-MTN | ET-MTN |
| SOM | 637 | 1 | SOMTELESOM | TELESOM |
| SOM | 637 | 82 | Telsom Mobile | telsom |
| DJI | 638 | 1 | DJ EVATIS | EVATIS |
| KEN | 639 | 2 | Safaricom | SAF-COM |
| KEN | 639 | 3 | YES! | YES! |
| TZA | 640 | 2 | MOBITEL - TZ | MOBITEL |
| TZA | 640 | 3 | ZANTEL-TZ | ZANTEL |
| TZA | 640 | 4 | VodaCom | VodaCom |
| TZA | 640 | 5 | celtel | celtel |
| UGA | 641 | 1 | UG CelTel | CELTEL |
| UGA | 641 | 10 | MTN-UGANDA | MTN-UG |
| UGA | 641 | 11 | mango | mango |
| BDI | 642 | 1 | Spacetel BI | SPACETEL |
| BDI | 642 | 2 | BUSAFA | SAFARIS |
| MOZ | 643 | 1 | MOZ - mCel | mCel |
| MOZ | 643 | 4 | VodaCom-MZ | VodaCom |
| ZMB | 645 | 1 | ZM CELTEL | CELTEL |
| ZMB | 645 | 2 | TELECEL ZM | TELECEL |
| MDG | 646 | 1 | MG Madacom | Madacom |
| MDG | 646 | 2 | MG ANTARIS | ANTARIS |
| REU | 647 | 0 | Orange re | Orange |
| REU | 647 | 2 | F-OMT | OMT |
| FRA | 647 | 10 | SFR REUNION | SFR RU |
| ZWE | 648 | 1 | ZW NET*ONE | NETONE |
| ZWE | 648 | 3 | TELECEL ZW | TELECEL |
| ZWE | 648 | 4 | ZW ECONET | ECONET |
| NAM | 649 | 1 | MTC NAMIBIA | MTCNAM |
| MWI | 650 | 1 | MW CP 900 | CP 900 |
| MWI | 650 | 10 | CELTEL MW | CELTEL |
| LSO | 651 | 1 | VCL COMMS | VCLCOM |
| LSO | 651 | 2 | LS-ECONET-EZI-CEL | EZI-CEL |
| BWA | 652 | 1 | BW MASCOM | MASCOM |
| BWA | 652 | 2 | Orange | Orange |
| SWZ | 653 | 10 | Swazi-MTN | SwaziMTN |
| COM | 654 | 1 | HURI | HURI |
| ZAF | 655 | 1 | VodaCom-SA | VODA |
| ZAF | 655 | 7 | Cell C | Cell C |
| ZAF | 655 | 10 | MTN-SA | MTN |
| BLZ | 702 | 67 | BTL | BTL |

wavecom © 2003-2004 All rights reserved
Wavecom Confidential & Proprietary Information

This document is the sole and exclusive property of WAVECOM. Not to be distributed or divulged without prior written agreement.

| Country Initials | MCC | MNC | Preferred Presentation of Country Initials and Mobile Network Name | Abbreviated Mobile Network Name |
|---|---|---|---|---|
| BLZ | 702 | 68 | INTELCO | INTELCO |
| GTM | 704 | 2 | Comcel_GSM | COMCEL |
| GTM | 704 | 3 | MoviStar | MoviStar |
| ESV | 706 | 1 | ESV PERSONAL | PERSONAL |
| SLV | 706 | 2 | Digicel | DIGICEL |
| SLV | 706 | 3 | TELEMOVIL | TM |
| SLV | 706 | 4 | MoviStar | MoviStar |
| ESV | 706 | 10 | ESV PERSONAL | PERSONAL |
| HND | 708 | 1 | MEGATEL | HNDMGT |
| HND | 708 | 2 | CELTELHND | CELTEL |
| NIC | 710 | 21 | ENITEL | ENITEL |
| NIC | 710 | 73 | SERCOM | SERCOM |
| CRI | 712 | 1 | I.C.E. | I.C.E. |
| PAN | 714 | 1 | PANCW | PANCW |
| PE | 716 | 10 | TIM PERU | TIM |
| ARG | 722 | 7 | UNIFON | UNIFON |
| ARG | 722 | 34 | PERSONAL | AR TP |
| ARG | 722 | 35 | PORT-HABLE | P-HABLE |
| ARG | 722 | 310 | ARG CTI Movil | CTIMovil |
| BRA | 724 | 2 | TIM BRASIL | TIM |
| BRA | 724 | 3 | TIM BRASIL | TIM |
| BRA | 724 | 4 | TIM BRASIL | TIM |
| BRA | 724 | 5 | Claro | Claro |
| BRA | 724 | 15 | BRA SCTL | SCTL |
| BRA | 724 | 16 | BRA BrTCelular | BrTCel |
| BRA | 724 | 31 | Oi | Oi |
| CHL | 730 | 1 | ENTEL PCS | ENTEL PCS |
| CHL | 730 | 2 | TELEFONICA | TMOVIL |
| CHL | 730 | 10 | ENTEL PCS | ENTEL PCS |
| COL | 732 | 101 | COLOMBIA - COMCEL S.A | COMCEL |
| COL | 732 | 111 | COL MOVIL | COL MOVIL |
| VEN | 734 | 1 | VZ INFO | INFONT |
| VEN | 734 | 2 | DIGITEL TIM | DIGITEL |
| BOL | 736 | 1 | NUEVATEL | VIVA |
| BOL | 736 | 2 | EMOVIL | BOMOV |
| GUY | 738 | 1 | GUY TW | TWTGUY |
| ECU | 740 | 1 | PORTA GSM | PORTAGSM |
| PGY | 744 | 1 | HOLA PARAGUAY | VOX |
| PGY | 744 | 2 | PGY Porthable | Porth |
| PRY | 744 | 4 | Telecel GSM | Telecel |
| SUR | 746 | 2 | SR.TELESUR.GSM | TeleG |
| | 901 | 5 | Thuraya | Thuraya |

© 2003-2004 All rights reserved
Wavecom Confidential & Proprietary Information

This document is the sole and exclusive property of WAVECOM. Not to be distributed or divulged without prior written agreement.

## 1.13 CPHS Information field

| CPHS Information | | |
|---|---|---|
| **Data field** | **Bit Field** | **Meaning** |
| 0 | None | All information |
| 1 | 0 | CSP service activated and allocated |
| 2 | 1 | SST service activated and allocated |
| 3 | 2 | Mailbox Number service activated and allocated |
| 4 | 3 | Operator Name Shortform service activated and allocated |
| 5 | 4 | Information Numbers service activated and allocated |
| 6 | 5 | RFU |
| 7 | 6 | RFU |
| 8 | 7 | RFU |
| 9 | 8 | Voice Message Waiting indicator for Line 1 |
| 10 | 9 | Voice Message Waiting indicator for Line 2 |
| 11 | 10 | Data Message Waiting indicator |
| 12 | 11 | Fax Message Waiting indicator |
| 13 | 12 | Call Forward Activated indicator for Line 1 |
| 14 | 13 | Call Forward Activated indicator for Line 2 |
| 15 | 14 | Call Forward Activated indicator for Data |
| 16 | 15 | Call Forward Activated indicator for Fax |
| 17 | 16 | Reserved |
| 18 | 17 | Reserved |
| 19 | 18 | Reserved |
| 20 | 19 | Reserved |
| 21 | 20 | Line 1 Mailbox Number available |
| 22 | 21 | Line 2 Mailbox Number available |
| 23 | 22 | Data Mailbox Number available |
| 24 | 23 | Fax Mailbox Number available |
| 25 | 24 | EF Mn Updateable |

© 2003-2004 All rights reserved
Wavecom Confidential & Proprietary Information

This document is the sole and exclusive property of WAVECOM. Not to be distributed or divulged without prior written agreement.

## 1.14 CSP constants

### 1.14.1 Service Group: Call Offering

| Service | External value |
|---|---|
| Call Forwarding Unconditional | 1 |
| Call Forwarding On User Busy | 2 |
| Call Forwarding on No Reply | 3 |
| Call Forwarding On User Not Reachable | 4 |
| Call Transfer | 5 |

### 1.14.2 Service Group: Call Restriction

| Service | External value |
|---|---|
| Barring of All Outgoing Calls | 9 |
| Barring of Outgoing International Calls | 10 |
| Barring of Outgoing International Calls except those directed to the Home PLMN country | 11 |
| Barring of All Incoming Calls when Roaming Outside the Home PLMN country | 12 |
| BIC roam | 13 |

### 1.14.3 Service Group: Other Supplementary Services

| Service | External value |
|---|---|
| Multi-Party Service | 17 |
| Closed User Group | 18 |
| Advice Of Charge | 19 |
| Preferential CUG | 20 |
| CUG Outgoing Access | 21 |

### 1.14.4 Service Group: Group Completion

| Service | External value |
|---|---|
| Call Hold | 25 |
| Call Waiting | 26 |
| Completion of Call to Busy Subscriber | 27 |
| Restriction of the menus allowing use of user to user signaling | 28 |

wavecom © 2003-2004 All rights reserved
Wavecom Confidential & Proprietary Information

This document is the sole and exclusive property of WAVECOM. Not to be distributed or divulged without prior written agreement.

### 1.14.5 Service Group: Teleservices

| Service | External value |
|---|---|
| Short Message – Mobile Terminated | 33 |
| Short Message – Mobile Originated | 34 |
| Short Message – Cell Broadcast | 35 |
| Restricts menu options for the ability to set reply path active on outgoing Short Messages | 36 |
| SMS Delivery Confirmation | 37 |
| Restriction of menus for SMS Protocol ID options | 38 |
| Validity Period, restriction of menus for SMS Validity period options | 39 |

### 1.14.6 Service Group: CPHS Teleservices

| Service | External value |
|---|---|
| Alternate Line Service | 41 |

### 1.14.7 Service Group: CPHS Features

| Service | External value |
|---|---|
| Reserved: SST in phase 1 CPHS | 49 |

### 1.14.8 Service Group: Number Identification

| Service | External value |
|---|---|
| Calling Line Identification Presentation | 57 |
| Connected Line Identification Restriction | 59 |
| Connected Line Identification Presentation | 60 |
| Malicious Call Indicator | 61 |
| CLI per call mode - default block CLI - menu to send CLI | 63 |
| CLI per call mode - default send CLI - menu to block CLI | 64 |

© 2003-2004 All rights reserved
Wavecom Confidential & Proprietary Information

This document is the sole and exclusive property of WAVECOM. Not to be distributed or divulged without prior written agreement.

### 1.14.9 Service Group: Phase 2+ Services

| Service | External value |
|---|---|
| Menus concerned with GPRS functionality | 65 |
| Menus concerned with High Speed Circuit Switched Data functionality | 66 |
| ASCI Voice Group call menus | 67 |
| ASCI Voice Broadcast service menus | 68 |
| Multi Subscriber profile menus | 69 |
| Multiple band: Restriction of menus allowing user to select a particular GSM 900/ 1800 or 1900 band | 70 |

### 1.14.10 Service Group: Value Added Services

| Service | External value |
|---|---|
| Restriction of menu options for manual PLMN selection | 73 |
| Restriction of menu options for Voice Mail or other similar menus | 74 |
| Restriction of menu options for the ability to send Short messages with type Paging | 75 |
| Restriction of menu options for the ability to send Short messages with type Email | 76 |
| Restriction of menu options for Fax calls | 77 |
| Restriction of menu options for Data calls | 78 |
| Restriction of menus allowing the user to change language | 80 |

### 1.14.11 Service Group: Information Numbers

| Service | External value |
|---|---|
| The ME shall only present Information numbers to the user if this field is set to FF | 81 |

*Note: External values not used in these tables are reserved for further use.*

© 2003-2004 All rights reserved
Wavecom Confidential & Proprietary Information

This document is the sole and exclusive property of WAVECOM. Not to be distributed or divulged without prior written agreement.

# 2 Examples

This chapter gives illustrative examples of the general AT commands used for a communication. The presentation of commands and responses is as close as possible to what a user can see on its test monitor. Blank lines have been intentionally removed. The characters on the left margin are DTE generated. Middle column characters are modem generated.

## 2.1 Examples with the PIN required

### 2.1.1 when the ME has to be powered ON.

| | |
|---|---|
| AT+CMEE=1 | *Enable the report mobile equipment errors* |
| OK | |
| AT+CREG=1 | *Report registration* |
| OK | |
| AT+CPAS | *Query ME Status* |
| +CPAS: 5 | *(ME is asleep)* |
| OK | |
| AT+CFUN=1 | *Set ME to full functionality* |
| OK | |
| AT+COPS=0 | *Ask for automatic operator selection and registration.* |
| +CME ERROR: 11 | *SIM PIN required.* |
| AT+CPIN=1234 | *User entered a wrong PIN* |
| +CME ERROR: 16 | *Incorrect password.* |
| AT+CPIN=0000 | |
| OK | *PIN Ok* |
| AT+COPS=0 | *Ask for automatic operator selection and registration.* |
| OK | |
| +CREG:1 | *Registered on the network* |
| AT+COPS=3,0 | *Select the long name alphanumeric format.* |
| OK | |
| AT+COPS? | *Get the operator name* |
| +COPS: 0,0,"I OMNITEL" | |
| OK | |

wavecom © 2003-2004 All rights reserved
Wavecom Confidential & Proprietary Information

This document is the sole and exclusive property of WAVECOM. Not to be distributed or divulged without prior written agreement.

### 2.1.2 When the ME has already been powered on.

AT+CMEE=1 *Enable the report mobile equipment errors*

OK

AT+CPAS *Get the ME Status*

+CPAS: 0 *ME is ready to receive commands*

OK

AT+CPIN? *Is ME requiring a password?*

+CPIN: SIM PIN *Yes, SIM PIN required*

AT+CPIN=0000

OK *PIN Ok*

## 2.2 Examples where a voice call is originated.

### 2.2.1 When the ME is powered on and the SIM PIN has been entered.

AT+CMEE=1 *Enable the reporting of mobile equipment errors*

OK

AT+WIND=63 *Ask to display the general indications.*

OK

AT+CPIN? *Is ME requiring a password?*

+CPIN: READY *product is ready*

ATD0607103543; *Make a voice call*

+WIND: 5,1 *Indication of call*

+WIND: 2 *Remote party is ringing.*

OK *Call setup was successful*

*Conversation...*

ATH *Release the call*

OK

### 2.2.2 When a voice call is attempted from a phonebook:

ATD>"John Pamborn";

+CME ERROR: 22 *The "John Pamborn" entry is not found.*

ATD>"Joel Guerry";

+WIND: 5,1 *Indication of outgoing call.*

*+WIND: 2* *Remote party is ringing.*

*OK* *Call setup was successful*

*Conversation...*

ATH *Release the call*

OK

© 2003-2004 All rights reserved
Wavecom Confidential & Proprietary Information

This document is the sole and exclusive property of WAVECOM. Not to be distributed or divulged without prior written agreement.

## 2.3 Example with incoming calls

### 2.3.1 When the ME is powered on and the SIM PIN has been entered.

AT+CMEE=1 *Enable the report mobile equipment errors*
OK

AT+WIND=63 *Ask to display the general indications.*

OK

AT+CLIP=1 *Enable the calling line identification presentation.*

OK

AT+CRC=1 *Enable extended format of incoming indication.*

OK

AT+CNUM *Query own number (voice number) or MSISDN.*

+CNUM: “Speech”,”+33608971019”,145

OK

*Call this number from another equipment.*

+WIND: 5, 1 *Indication of call (Ring)*

+CRING: VOICE *Type of call is VOICE.*

+CLIP: "+33607103543",145,,,"John Panborn" *Identification of the remote party.*

+CRING: VOICE

ATA *Answer the call.*

OK

*...Conversation...*

NO CARRIER *The call has been released by the remote party.*

+WIND: 6,1 *Indication of call release.*

## 2.4 Example of a call forwarding

### 2.4.1 When the ME is powered on and the SIM PIN has been entered.

AT+CMEE=1 *Enable the report mobile equipment errors*
OK

AT+CCFC=1,3,”0607492638” *Register to a call forwarding when ME is busy.*

OK

AT+CCFC=2,3,”0149293031”,129 *Register to a call forwarding when it does answer.*

+CME ERROR: 30 *No network service*

AT+CCFC=1,2 *Interrogate*

+CCFC: 1,1,”+33607492638”,145 *Call forwarding active for a voice call.*

AT+CCFC=1,4 *Delete call forwarding ME busy*

OK

wavecom © 2003-2004 All rights reserved
Wavecom Confidential & Proprietary Information

This document is the sole and exclusive property of WAVECOM. Not to be distributed or divulged without prior written agreement.

## 2.5 Example of a multiparty call

When the ME is powered on and the SIM PIN has been entered.

AT+CMEE=1 *Enable the report mobile equipment errors*

OK

AT+WIND=63 *Ask to display the general indications.*

OK

AT+CCWA=1,1 *Enable call waiting.*

OK

ATD>"John Panborn";

+WIND: 5,1 *Indication of call.*
+WIND: 2 *Remote party is ringing.*

OK *Call setup was successful*

*...Conversation (call1)...*

+WIND: 5,2 *Indication of another call.*

+CCWA: "+33595984834",145,"Dolores Claiborne" *Another call is waiting.*

AT+CHLD=2 *Put first call on hold and answer the second one.*

OK

*...Conversation (call2)...*

AT+CHLD=3 *Every call is part of a multiparty conversation.*

OK

AT+CHLD=11 *Release the first call (with John Panborn) and recover the second call (with Dolores Claiborne)*

*...Conversation (call2)...*

ATH *Release the second call.*

© 2003-2004 All rights reserved
Wavecom Confidential & Proprietary Information

This document is the sole and exclusive property of WAVECOM. Not to be distributed or divulged without prior written agreement.

## 2.6 Examples about phonebooks

For each example illustrated in this section: at the beginning the ME is powered on and the SIM PIN has been entered.

### 2.6.1 Example 1: The whole phonebook of the ME is read

| Command | Response |
|---|---|
| AT+CPBS=?<br>*Note: Query supported phonebook memories* | +CPBS: (“SM”,”FD”,”ON”)<br>*Note: ADN, FDN, and MSISDN phonebooks supported.* |
| AT+CPBS=”SM”<br>*Note: Select ADN phonebook.* | OK |
| AT+CPBR=?<br>*Note: Read the index range and the length of the elements.* | +CPBR: (1-80),20,14<br>OK<br>*Note: 80 locations (from 1 to 80), max length of 20 for the phone number, 14 characters max for the text.* |
| AT+CPBR=1,80<br>*Note: Read all entries (only the set ones are returned).* | +CPBR: 1,“0346572834”,129,”Dolores Claiborne”<br>+CPBR: 2,”1284374523”,129,”Thad Beaumont”<br>+CPBR: 3, “1243657845”,129,”John Panborn”<br>OK |

### 2.6.2 Example 2: Erase or Write a phonebook entry

| Command | Response |
|---|---|
| AT+CPBW=?<br>*Note: Get the phonebook type.* | +CPBW: (1-80),20,(129,145),14<br>*Note: 80 locations, max length of 20 for the phone number, TON/NPI of 129 or 145 and 14 characters max for the text.* |
| AT+CPBW=3<br>Note: *Erase location 3* | OK |
| AT+CPBW=3,”4356729012”,129,”Carry”<br>Note: *Write at location 3.* | OK |
| AT+CPBR=1,80<br>Note: *Read all entries (only the ones set are returned).* | +CPBR:1,“0346572834”,129,”Dolores Claiborne”<br>+CPBR:2,”1284374523”,129,”Thad Beaumont”<br>+CPBR: 3,”4356729012”,129,”Carry”<br>OK |

© 2003-2004 All rights reserved
Wavecom Confidential & Proprietary Information
This document is the sole and exclusive property of WAVECOM. Not to be distributed or divulged without prior written agreement.

### 2.6.3 Example 3: Find phonebook entries

| Command | Response |
|---|---|
| AT+CPBF=?<br>*Note: Get the phonebook type.* | +CPBF: 20,14<br>*Note: Max length of 20 for the phone number, 10 characters for the text.* |
| AT+CPBF="D"<br>*Note: Read entries starting with "D".* | +CPBF: 1,"0346572834",129,"Dolores Clairborne"<br>OK |
| AT+CPBF="W"<br>*Note: Read entries with "W".* | +CME ERROR: 22<br>*Note: Entry not found.* |

### 2.6.4 Example 4: Phonebook and custom character set

The Custom To Extended GSM conversion table and the Extended GSM To Custom conversion table can be used to display the extended GSM characters:

| ^ € { } [ ] ~ \

To manage one of these extended characters, the character 0x1B must be set in the right place (in the position corresponding to the value of the ASCII code) in the Custom to GSM conversion table (instead of 0x20 (space ASCII code)).

For example, the ASCII code of \ (backslash) is 0x5C, the character 0x1B must be set at the position 0x5C of the Custom to GSM conversion table. The range of character 0x5C in this table is 92. So to update the table the command AT+WCCS=1,0,92 will be used.

In the other way, write the space ASCII code 0x20 in the right place in the Custom to GSM conversion table if an extended character is not needed.

| Command | Response |
|---|---|
| AT+CPBS?<br>*Note: Query the current phonebook* | +CPBS: 3,80<br>OK<br>*Note: ADN selected, 3 entries stored* |
| AT+WPCS?<br>*Note: Query the current phonebook char set* | +WPCS: "TRANSPARENT"<br>OK<br>Note: *Transparent mode selected* |
| AT+CPBR=1 | +CPBR: 1,"0146290800",129,"S bastien"<br>OK<br>*Note: GSM character "é" is not displayed* |

wavecom © 2003-2004 All rights reserved
Wavecom Confidential & Proprietary Information

This document is the sole and exclusive property of WAVECOM. Not to be distributed or divulged without prior written agreement.

| Command | Response |
|---|---|
| AT+WCCS=1,0,0,255<br>>2020202020202020202020A20200D2020202020<br>20205F2020202020202020202020202122230225 2<br>62728292A2B2C2D2E2F3031323334353637383 9<br>3A3B3C3D3E3F004142434445464748494A4B4C<br>4D4E4F505152535455565758595A20202020112<br>06162636465666768696A6B6C6D6E6F70717273<br>7475767778797A2020202020202020202020202<br>0202020202020202020272720202020202020202<br>0202020202040200124032 05F20202020202D2<br>0202020202027202020202020202020604141<br>41415B0E1C09451F454549494949445D4F4F4F4<br>F5C200B5555555E59201E7F6161617B0F1D6304<br>05656507696969207D086F6F6F7C200C0675757<br>E792079 | OK |
| AT+WCCS=1,1,0,127<br>>40A324A5E8E9F9ECF2C70AD8F80DC5E5205F2<br>0202020202020202020C6E6DFC920212223A425<br>262728292A2B2C2D2E2F3031323334353637383<br>93A3B3C3D3E3FA14142434445464748494A4B4<br>C4D4E4F505152535455565758595AC4D6D1DCA<br>7BF6162636465666768696A6B6C6D6E6F707172<br>737475767778797AE4F6F1FCE0<br>*Note: Set the custom character set tables to enable a GSM to default font conversion* | OK |
| AT+WPCS="CUSTOM"<br>*Note: Use the custom character set* | OK |
| AT+CPBR=1 | +CPBR: 1,"0146290800",129,"Sébastien"<br>OK<br>*Note: GSM character "é" is correctly displayed* |

© 2003-2004 All rights reserved
Wavecom Confidential & Proprietary Information

This document is the sole and exclusive property of WAVECOM. Not to be distributed or divulged without prior written agreement.

### 2.6.5 Example 5: Use the extended phonebook

| Command | Response |
|---|---|
| AT+WCOS? | +WCOS: 0<br>OK<br>*Note: Phonebook not extended* |
| AT+CPBS? | +CPBS: "SM",10,20<br>OK<br>*Note: Selected phonebook: ADN* |
| AT+CPBW=1,"0123456",,"test" | OK<br>*Note: Write an entry in SIM* |
| AT+CPBR=1 | +CPBR: 1,"0123456",129,"test"<br>OK<br>*Note: Read an entry in SIM* |
| AT+CPBW=1,"0123456",,"test",1 | +CME ERROR: 3<br>*Note: +WCOS=0; you can't write a phonebook group* |
| AT+WCOS=1 | OK<br>*Note: Phonebook extended in SIM* |
| AT+CPBW=1,"0123456",,"test",1 | OK<br>*Note: Write an entry in SIM* |
| AT+CPBR=1 | +CPBR: 1, "0123456", 129, "test", 1<br>OK<br>*Note: Read an entry in SIM (extended)* |
| AT+WCOS=0 | OK |
| AT+WCOS? | +WCOS: 0<br>OK<br>*Note: Phonebook not extended* |
| AT+CPBR=1 | +CPBR: 1,"0123456",129,"test"<br>OK<br>*Note: Read an entry in SIM (not extended)* |
| AT+CPBS="ME" | OK<br>N*ote: Selected phonebook: ME (Flash)* |
| AT+WCOS=1 | OK<br>*Note: Phonebook extended* |
| AT+CPBW=1, "+331290909", 145, "Fred", "0141284549", 129, "0600003210", 129, "0141280000", 129, "019876543210", 129, "fred@mywebaddress.com", "Becker Street London",1 | OK<br>*Note: Write an entry in Flash* |

© 2003-2004 All rights reserved
Wavecom Confidential & Proprietary Information

This document is the sole and exclusive property of WAVECOM. Not to be distributed or divulged without prior written agreement.

| Command | Response |
|---|---|
| AT+CPBR=1 | +CPBR: 1, "+331290909", 145,"Fred", "0141284549", 129, "0600003210", 129, "0141280000", 129, "019876543210", 129, "fred@mywebaddress.com", "Becker Street London",1<br>OK |
| AT+WCOS=0 | OK |
| AT+CPBR=1 | +CPBR: 13,"+331290909",145,"Fred"<br>OK<br>*Note: Read an entry in Flash (not extended)* |

To use the extended ME phonebook, you must do:

AT+CPBS="ME"

AT+WCOS=1

To use the extended ADN phonebook, you must do:

AT+CPBS="SM"

AT+WCOS=1

To use the not extended phonebook, you must do:

AT+WCOS=0

### 2.6.6 Example 6: Phonebook and custom character set

| Command | Response |
|---|---|
| AT+CPBS?<br>*Note: Query the current phonebook* | +CPBS: 3,80<br>OK<br>*Note: ADN selected, 3 entries stored* |
| AT+WPCS?<br>*Note: Query for the current phonebook character set* | +WPCS: "TRANSPARENT"<br>OK<br>*Note: Transparent mode selected* |
| AT+CPBW=1,"0146290800",129,"test of { }" | |
| AT+CPBR=1 | +CPBR: 1,"0146290800",129," test of "<br>OK<br>*Note: GSM characters "{"and "}" are not displayed* |

© 2003-2004 All rights reserved
Wavecom Confidential & Proprietary Information
This document is the sole and exclusive property of WAVECOM. Not to be distributed or divulged without prior written agreement.

| Command | Response |
|---|---|
| AT+WCCS=1,0,0,255<CR><br>>20202020202020202020A20200D2020202020<br>20205F20202020202020202020202021222302252<br>62728292A2B2C2D2E2F30313233343536373839<br>3A3B3C3D3E3F00414243444546474849 4A4B4C<br>4D4E4F505152535455565758595A1B1B1B1B11<br>20616263646566676869 6A6B6C6D6E6F7071727<br>37475767778797A1B1B1B1B201B20202020202<br>02020202020202020202027272020202020202020<br>20202020202020402001240 3205F20202020202<br>D20202020202027202020202020202020206041<br>4141415B0E1C09451F454549494949445D4F4F4<br>F4F5C200B5555555E59201E7F6161617B0F1D63<br>04056565076969692 07D086F6F6F7C200C06757<br>57E792079<br><CTRL-Z> | OK |
| AT+WCCS=1,1,0,127<CR><br>>40A324A5E8E9F9ECF2C70AD8F80DC5E5205F2<br>02020202020202020C6E6DFC920212223A425<br>262728292A2B2C2D2E2F303132333435363738 3<br>93A3B3C3D3E3FA1414243444546474849 4A4B4<br>C4D4E4F505152535455565758595AC4D6D1DCA<br>7BF6162636465666768696A6B6C6D6E6F707172<br>737475767778797AE4F6F1FCE0<br><CTRL-Z><br>*Note: Set the custom character set tables to enable a GSM to default font conversion* | OK |
| AT+WPCS="CUSTOM"<br>*Note: Use the custom character set* | OK |
| AT+CPBR=1 | +CPBR: 1,"0146290800",129," test of { }"<br>OK<br>*Note: GSM characters "{" and "}" are correctly displayed* |

© 2003-2004 All rights reserved
Wavecom Confidential & Proprietary Information

This document is the sole and exclusive property of WAVECOM. Not to be distributed or divulged without prior written agreement.

### 2.6.7 Example 7: MT Phonebook (read only)

| Command | Response |
|---|---|
| AT+CPBS="MT" | OK<br>*Note: Select MT phonebook* |
| AT+WCOS=1<br>*Note: Select extended entries* | OK |
| AT+CPBF=""<br>Note: *Read all entries* | +CPBF: 1,"0987654321",129," Carry",0<br>+CPBF: 2;"9876543210",129,"John",0<br>+CPBF: 31,"0346572834",129,"Dolores Claiborne","9876543210",129,"",,"","6547891230",129, "dolores@mywebaddress.com"," Becker Street London",0<br>+CPBF: 32, "6547892012", 129, "Pierre", "", ,"",,"9874521021",129,"",,,"Pierre@mywebaddress.com", "",0<br>OK |
| AT+WCOS=0<br>*Note: Select extended entries: not extended* | OK |
| AT+CPBF=""<br>Note: *Read all entries* | +CPBF: 1,"0987654321",129," Carry"<br>+CPBF: 2;"9876543210",129,"John"<br>+CPBF: 31,"0346572834",129,"Dolores Claiborne"<br>+CPBF: 32,"6547892012",129,"Pierre"<br>OK |

Index: 1 and 2 → SM phonebook entries

Index: 31 and 32 → ME phonebook entries

© 2003-2004 All rights reserved
Wavecom Confidential & Proprietary Information

This document is the sole and exclusive property of WAVECOM. Not to be distributed or divulged without prior written agreement.

## 2.7 Examples about short messages

### 2.7.1 Send a short message

| | |
|---|---|
| AT+CNMI=0,1,1,1,0 | *SMS-DELIVERs are directly stored, SMS-STATUS- REPORTs are displayed* |
| OK | |
| AT+CSMP=17,169,0,0 | *SMS-SUBMIT message with a validity period (one day)* |
| OK | |
| AT+CMGF=1 | *Text mode to send a Short Message* |
| OK | |
| AT+CSCA="+33608080706" | *Set Service Center Address to +33608080706* |
| OK | |
| AT+CMGS=0601290800 | *Send a SMS-SUBMIT to mobile phone* |
| | *Product sends a 4 characters sequence: 0x0D 0x0A 0x3E 0x20* |
| This is the first text line | *Edit first line and press carriage return (<CR>, 0x0D)* |
| This is the last text line | *Edit last line and send message by pressing <ctrl-Z> (0x1A)* |
| +CMGS: 5 | *Success: message reference 5 is returned from the SMS Service Center* |
| +CDS: 2,5,"0601290800",129,"99/05/01 14:15:10+04" | |
| | *Success: report of successful message delivery received* |

### 2.7.2 Read short messages

| | |
|---|---|
| AT+CMGF=1 | *Text mode to read Short Messages* |
| AT+CMGL="ALL" | *List all stored messages* |
| +CMGL: 1,"REC READ","+336290918",,"99/05/01 14:15:10+04" | |
| I will be late | *This is the first message* |
| +CMGL: 2,"REC UNREAD","+336290918",,"99/05/01 14:19:44+04" | |
| Traffic jam on Broadway | *This is the second message* |
| OK | |
| AT+CMGR=1 " " | *Read the first message* |
| +CMGR: "REC READ","+336290918",,"99/05/01 14:19:44+04" | |
| OK | |

wavecom © 2003-2004 All rights reserved
Wavecom Confidential & Proprietary Information

This document is the sole and exclusive property of WAVECOM. Not to be distributed or divulged without prior written agreement.

## 2.8 Examples about Fax class 2

### 2.8.1 Send a fax class 2

AT+FCLASS=2 *Select fax class 2*

OK

AT+FLID="LocalFax"

OK

ATD0601234567 *Call establishment*

+FCON *Connection OK*

[+FCSI: "RemoteFax"]

+FDIS:0,3,0,2,0,0,0,0

OK

AT+FDT *Beginning of the data transfer*

+FDCS:0,3,0,2,0,0,0,0

CONNECT

<0x11h> *Send carrier*

*First page data terminated by <0x10h><0x03h>*

OK *Page transmitted*

AT+FET=0 *Send another page*

+FPTS:1 *First page acquitted*

OK

AT+FDT

CONNECT

<0x11h> *Send carrier*

*Second page data terminated by <0x10h><0x03h>*

OK *Page transmitted*

AT+FET=2 *No more page*

+FPTS:1 *First page acknowledged*

+FHNG:0 *Normal end of connection*

OK

© 2003-2004 All rights reserved
Wavecom Confidential & Proprietary Information

This document is the sole and exclusive property of WAVECOM. Not to be distributed or divulged without prior written agreement.

### 2.8.2 Receive a fax class 2

AT+FCR=1

OK

AT+FLID="LocalFax"

OK

RING *Incoming call*

ATA *Answer*

+FCON *Connection OK*

[+FTSI: "RemoteFax"]

+FDCS:0,3,0,2,0,0,0,0

OK

AT+FDR

+FCFR

+FDCS:0,3,0,2,0,0,0,0

CONNECT

<0x12h> *Receive page carrier*

*First page data terminated by*

<0x10h><0x03h>

OK *Page received*

+FPTS:1 *First page acknowledged*

+FET:0 *To receive another page*

OK

AT+FDR

+FDCS:0,3,0,2,0,0,0,0

CONNECT

<0x12h> *Receive page carrier*

*Second page data terminated by*

<0x10h><0x03h>

OK *Page received*

+FPTS:1 *Second page acknowledged*

+FET:2 *No more page to receive*

OK

AT+FDR

+FHNG:0 *Normal end of connection*

OK

wavecom © 2003-2004 All rights reserved
Wavecom Confidential & Proprietary Information

This document is the sole and exclusive property of WAVECOM. Not to be distributed or divulged without prior written agreement.

## 2.9 +CSIM and +CRSM Examples

NOTE: if SIM answer is not specified in the following examples, it will mean that the answer will depend on the SIM content.

### 2.9.1 DF GSM selection and then status

AT+CSIM=14,"A0A40000027F20"

+CSIM=4,"9F16"

AT+CSIM=10,"A0F2000016"

+CSIM=48,"..."

### 2.9.2 DF Telecom selection and then status

AT+CSIM=14,"A0A40000027F10"

+CSIM=4,"9F16"

AT+CSIM=10,"A0F2000016"

+CSIM=48,"..."

### 2.9.3 EF ADN selection and then status

*DF Telecom selection is mandatory just before the following AT commands.*

AT+CSIM=14,"A0A40000026F3A"

+CSIM=4,"9F0F"

AT+CSIM=10,"A0C000000F"

+CSIM=34,"..."

### 2.9.4 Status commands

*Status – No File Id – without P1,P2, P3*

AT+CRSM=242

*Status – 6F3A (EF ADN) – without P1, P2, P3*

AT+CRSM=242,28474

*Status – 6F07 (EF IMSI) – without P1, P2, P3*

AT+CRSM=242,28423

*Status – 3F00 (MF) – without P1, P2, P3*

AT+CRSM=242,16128

*Status – 7F10 (DF Telecom) – without P1, P2, P3*

AT+CRSM=242,32528

*Status – 7F20 (DF GSM) – without P1, P2, P3*

AT+CRSM=242,32544

© 2003-2004 All rights reserved
Wavecom Confidential & Proprietary Information

This document is the sole and exclusive property of WAVECOM. Not to be distributed or divulged without prior written agreement.

### 2.9.5 Get Response commands

*Get Response - (EF ADN) – without P1, P2, P3*

AT+CRSM=192,28474

*Get Response - (EF IMSI) – without P1, P2, P3*

AT+CRSM=192, 28423

*Get Response - (MF) – without P1, P2, P3*

AT+CRSM=192,16128

*Get Response - (DF Telecom) – without P1, P2, P3*

AT+CRSM=192,32528

*Get Response - (DF GSM) – without P1, P2, P3*

AT+CRSM=192,32544

*Get Response – 6F07 (EF IMSI)*

AT+CRSM=192, 28423,0,0,15

### 2.9.6 Read Record commands

*Read Record – EF ADN (Pin Code validated)*

AT+CRSM=178,28474,1,4,28

## 2.10 Examples about WAP commands

Within this example, please consider that *MyWapOperator* is your WAP operator. Its short name is *MWO*. *MyWapSite* is the WAP site.

The aim of the example is to create a full set of parameters for WAP operator MyWapOperator.

OK answers are omitted in these examples.

### 2.10.1 GPRS data account

*# Create GPRS Data account*

AT+WWAPD=4,"MWO GPRS"

AT+WWAPD=2

+WWAPD: 1,"MWO GPRS"

*# Set GPRS data account login*

AT+WWAPD=0,1,1,"login"

AT+WWAPD=1,1,1

+WWAPD: "login"

© 2003-2004 All rights reserved
Wavecom Confidential & Proprietary Information

This document is the sole and exclusive property of WAVECOM. Not to be distributed or divulged without prior written agreement.

*# Set GPRS data account password*

AT+WWAPD=0,1,2,"password"

AT+WWAPD=1,1,2

+WWAPD: "password"

*# Set GPRS data account APN*

AT+WWAPD=0,1,3,"mywapoperator.com"

AT+WWAPD=1,1,3

+WWAPD: " mywapoperator.com"

*# Check GPRS IP address type (default)*

AT+WWAPD=1,1,4

+WWAPD: 0

*# Check GPRS IP address (default for dynamic)*

AT+WWAPD=1,1,5

+WWAPD: 1,5,"000.000.000.000"

### 2.10.2 GSM data account

*# Create GSM Data account*

AT+WWAPD=5,"MWO GSM"

AT+WWAPD=3

+WWAPD: 2,"MWO GSM"

*# Set GSM data account login*

AT+WWAPD=0,2,1,"login"

AT+WWAPD=1,2,1

+WWAPD: "login"

*# Set GSM data account password*

AT+WWAPD=0,2,2,"password"

AT+WWAPD=1,2,2

+WWAPD: "password"

*# Set GSM data account call type (Analog is default)*

AT+WWAPD=0,2,6,1

AT+WWAPD=1,2,6

+WWAPD: 1

*# Set GSM data account dial-up number*

AT+WWAPD=0,2,7,"+33660000000"

AT+WWAPD=1,2,7

+WWAPD: "+33660000000"

wavecom © 2003-2004 All rights reserved
Wavecom Confidential & Proprietary Information

This document is the sole and exclusive property of WAVECOM. Not to be distributed or divulged without prior written agreement.

### 2.10.3 Gateway

*# Check that there is no gateway*

AT+WWAPG=2

+CME ERROR: 3

*# Create gateway*

AT+WWAPG=3,"MWO GW"

AT+WWAPG=2

+WWAPD: 1,"MWO GW"

*# Set Gateway IP*

AT+WWAPG=0,1,1,"172.020.001.007"

AT+WWAPG=1,1,1

+WWAPG: "172.020.001.007"

*# Check Gateway connection mode (default CL)*

AT+WWAPG=1,1,2

+WWAPG: 1

*# Check Gateway security (default Normal)*

AT+WWAPG=1,1,3

+WWAPG: 0

*# Attach GPRS Data account to gateway*

AT+WLNK=1,0,1,1

*# Attach GSM Data account to gateway*

AT+WLNK=1,0,1,2

### 2.10.4 Profile

*# Create profile*

AT+WWAPP=3,"MWO PROF"

AT+WWAPG=2

+WWAPP: 1,0,"MWO PROF"

*# Change profile name (not mandatory)*

AT+WWAPP=0,1,0,"MWO Profile"

AT+WWAPP=1,1,0

+WWAPP: "MWO Profile

*# Set Profile Homepage Name*

AT+WWAPP=0,1,1,"wap mywapsite"

AT+WWAPP=1,1,1

+WWAPP: "wap mywapsite"

wavecom © 2003-2004 All rights reserved
Wavecom Confidential & Proprietary Information

This document is the sole and exclusive property of WAVECOM. Not to be distributed or divulged without prior written agreement.

*# Set Profile Homepage URL*

AT+WWAPP=0,1,2,"http://wap.mywapsite.fr"

AT+WWAPP=1,1,2

+WWAPP: "http://wap.mywapsite.fr"

*# Set Profile Homepage user*

AT+WWAPP=0,1,3,"user"

AT+WWAPP=1,1,3

+WWAPP: "user"

*# Set Profile Homepage user*

AT+WWAPP=0,1,4,"password"

AT+WWAPP=1,1,4

+WWAPP: "password"

*# Select Profile*

AT+WWAPP=5,1

*# Check selected profile*

AT+WWAPP?

+WWAPP: 1

*# Attach gateway to profile*

AT+WLNK=1,1,1,1

### 2.10.5 Send some requests

*# Start a session Browse on homepage !*

AT+WWAPBR=1,1

*# Do a HTTP Request on a HTML file*

AT+WHTTPR=1,1,"http://mywapsite.fr","accept: text/html"

*# Do a HTTP Request on a WML file*

AT+WHTTPR=1,1,"http://wap.mywapsite.com","accept: text/vnd.wap.wml, image/vnd.wap.wbmp, application/vnd.wap.wmlc, text/vnd.wap.wmlscript, text/vnd.wap.wmls, application/vnd.wap.wmlscriptc"

*# Stop the session*

AT+WWAPBR=0

© 2003-2004 All rights reserved
Wavecom Confidential & Proprietary Information

This document is the sole and exclusive property of WAVECOM. Not to be distributed or divulged without prior written agreement.

# 3 Technical appendixes

## 3.1 Data / Commands multiplexing protocol

### 3.1.1 Introduction

The Wavecom multiplexing protocol operates between a DCE (Data Communication Equipment: the product) and a DTE (Data Terminal Equipment). It allows a double session over a serial link interface: one for AT commands and one for DATA communications.

AT+WMUX=1 activates the Multiplexing Mode. With this mode, AT commands and DATA are encapsulated into packets. The header of these packets allows to recognize whether it is a DATA packet or an AT command packet. AT+WMUX=0 deactivates the Multiplexing Mode and gets the product back to the default mode.

This appendix presents how the multiplexing mode handles the DATA and the AT commands flow. It also describes the format of DATA packets and AT command packets.

### 3.1.2 AT command packets

An AT command is encapsulated into a packet with a header which allows to separate it from DATA packets. This packet is formed by a header (3 bytes), the AT command itself and a checksum (1 byte):

| B7 | B6 | B5 | B4 | B3 | B2 | B1 | B0 |
|---|---|---|---|---|---|---|---|
| Start pattern → 0xAA | | | | | | | |
| AT command length LSB | | | | | | | |
| AT command pattern → 0x1D | | | | | AT command length MSB | | |
| AT command | | | | | | | |
| Checksum | | | | | | | |

The 3 bytes of the header are:

- ➔ the first byte (0xAA) is used to identify the packet,
- ➔ the second byte represents the 8 LSB (Low Significant Bits) bits of the length of the AT command,
- ➔ the third byte is made of 2 parts:
  - the 3 LSB bits are the 3 MSB (Most Significant Bits) bits of the length of the AT command,
  - the 5 MSB bits (0x1D which equals to 0xE8 with the 3 bits offset) are used to identify an AT command.

wavecom © 2003-2004 All rights reserved
Wavecom Confidential & Proprietary Information

This document is the sole and exclusive property of WAVECOM. Not to be distributed or divulged without prior written agreement.

The maximum length of an AT command could be 2047 bytes which is greater than all the existing AT commands.

The checksum is the addition (modulo 256) of all the transmitted bytes (header bytes and AT command bytes).

### 3.1.3 Data packets

Like for AT commands, DATA are encapsulated into packets. These packets are composed of a header (3 bytes), the data bytes and the checksum (1 byte):

| B7 | B6 | B5 | B4 | B3 | B2 | B1 | B0 |
|---|---|---|---|---|---|---|---|
| Start pattern → 0xDD | | | | | | | |
| Data packet length LSB | | | | | | | |
| Data packet type | | | | | Data packet length MSB | | |
| Data Bytes | | | | | | | |
| Checksum | | | | | | | |

The 3 bytes of the header are:

- ➔ the first byte (0xDD) used to identify the packet,
- ➔ the second byte represents the 8 LSB bits of the length of the data field,
- ➔ the last byte is made of 2 parts:
  - the 3 LSB bits represent the 3 MSB bits of the length of the data field,
  - the 5 MSB bits represent the packet type.

Data packets can have different values according to the type of packet:

- ➔ 0 – DATA packet: the packet contains the data to transmit on the radio link or received from the radio link,
- ➔ 1 – STATUS packet: the packet contains the status of SA, SB, X bits[1] and the break condition coding as follow:

| SA | SB | X | BRK | RI | Spare | Spare | Spare |
|---|---|---|---|---|---|---|---|

  - the length of data for the status packet is always equal to 1,
  - whenever a status changes (except break), all the status bits are included,
  - these bits are off by default (and therefore the bits DTR and RTS), so it is necessary to send a status packet to the target at the beginning of the multiplexing to start the transmission,
- ➔ 2 – READY packet: the packet indicates that the target is ready to receive data:

[1] These status bits contain the V24 control information:

- SA contains DTR (signal CT108 – from terminal to IWF) and DSR (signal CT107 – from terminal to IWF),
- SB contains RTS (signal CT105 – from terminal to IWF) and DCD (signal CT109 – from IWF to terminal),
- X contains CTS (signal CT106).

For more information, refer to GSM 07.02

© 2003-2004 All rights reserved
Wavecom Confidential & Proprietary Information
This document is the sole and exclusive property of WAVECOM. Not to be distributed or divulged without prior written agreement.

- no data are transmitted in this packet (so the length is null),

➔ 3 – BUSY packet: the packet indicates that the target is busy and can not receive data:

- like the ready packet, no data are transmitted,

➔ other values: currently, these values are not used (reserved for future enhancement).

The checksum is calculated like the AT command packet checksum (addition of all the transmitted bytes including the header bytes).

### 3.1.4 Example: AT command and its answer

When there is no encapsulation the AT command transmitted on the serial link is like this (in ASCII and hexadecimal):

AT\r\n ⇔ 0x41 0x54 0x0D 0x0A

and the answer is like this:

\r\nOK\r\n ⇔ 0x0D 0x0A 0x4F 0x4B 0x0D 0x0A

With the encapsulation in the serial link, the packet transmitted is (in hexadecimal):

0xAA 0x04 0xE8 0x41 0x54 0x0D 0x0A 0x42
and the answer is like this:

0xAA 0x06 0xE8 0x0D 0x0A 0x4F 0x4B 0x0D 0x0A 0x60

### 3.1.5 Example: Initialization and Data packet

When the Multiplexing Mode is activated (+WMUX=1), the product sends 2 Data packets after the establishment of a DATA call (after the CONNECT xxxx message): 1 READY Packet and 1 STATUS Packet. To set the different signals to the right value, it is necessary to send a STATUS packet to the product.

Here are some examples of STATUS packets:

0xDD 0x01 0x08 0x40 0x26 ⇔bit RTS is on

to start a data call, all the bits should be on:

0xDD 0x01 0x08 0xC0 0xA6 ⇔bits DTR and RTS are on

### 3.1.6 Restriction

The autobauding mode is not available when the Multiplexing Mode is activated: the serial link speed must be set to a fixed rate.

© 2003-2004 All rights reserved
Wavecom Confidential & Proprietary Information

This document is the sole and exclusive property of WAVECOM. Not to be distributed or divulged without prior written agreement.

## 3.2 Support of SIM ToolKit by the M.E.

This has been extracted from the GSM Technical specification 11.14.

**TABLE 1 – Support of SIM Toolkit classes**

| | | Classes | | |
|---|---|---|---|---|
| **Command description** | | **1** | **2** | **3** |
| CALL CONTROL | | | X | X |
| CELL BROADCAST DOWNLOAD | | | X | X |
| DISPLAY TEXT | | | X | X |
| EVENT DOWNLOAD | | | | |
| - MT call | | | | X |
| - Call connected | | | | X |
| - Call disconnected | | | | X |
| - Location status | | | | X |
| - User activity | | | | X |
| - Idle screen available | | | | X |
| GET INKEY | | | X | X |
| GET INPUT | | | X | X |
| GET READER STATUS | $(MultipleCard)$ | | | Lc |
| MENU SELECTION | | | X | X |
| MO SHORT MESSAGE CONTROL | | | | X |
| MORE TIME | | | X | X |
| PERFORM CARD APDU | $(MultipleCard)$ | | | Lc |
| PLAY TONE | | | X | X |
| POLLING OFF | | | X | X |
| POLL INTERVAL | | | X | X |
| POWER ON CARD | $(MultipleCard)$ | | | Lc |
| POWER OFF CARD | $(MultipleCard)$ | | | Lc |
| PROVIDE LOCAL INFORMATION | | | X | X |
| REFRESH | | X | X | X |
| RUN AT COMMAND | $(AT$) | | | Lc |
| SELECT ITEM | | | X | X |
| SEND SHORT MESSAGE | | | X | X |
| SEND SS | | | X | X |
| SEND USSD | | | | X |
| SET UP CALL | | | X | X |
| SET UP EVENT LIST | | | | X |
| SET UP IDLE MODE TEXT | $(IdleModeText)$ | | | X |
| SET UP MENU | | | X | X |
| SMS-PP DOWNLOAD | | X | X | X |
| TIMER MANAGEMENT | $(Timer)$ | | | Lc |
| TIMER EXPIRATION | $(Timer)$ | | | Lc |

wavecom © 2003-2004 All rights reserved
Wavecom Confidential & Proprietary Information

This document is the sole and exclusive property of WAVECOM. Not to be distributed or divulged without prior written agreement.

**TABLE 2 - Compatibility between available Terminal Responses and Proactive Commands**

| | Proactive commands | | | | | | | | | | | |
|---|---|---|---|---|---|---|---|---|---|---|---|---|
| Terminal Reponses | Setup Menu (0) | Display Text(1) | Get Inkey (2) | Get Input (3) | Setup Call (4) | Play Tone (5) | Select Item (6) | Refresh (7) | Send SS (8) | Send SMS (9) | Send USSD (10) | Setup event list (11) |
| Backward Move (95) | | • | • | • | | | • | | | | | |
| Command beyond ME capabilities (96) | • | • | • | • | • | • | • | • | • | • | • | • |
| ME currently unable to process command (97) | • | • | • | • | • | • | • | • | • | • | • | • |
| No response from the user (98) | | • | • | • | | | • | | | | | |
| SIM session terminated by the user (99) | | • | • | • | • | • | • | | | | | |

## 3.3 Structure of TERMINAL PROFILE

First byte (Download):

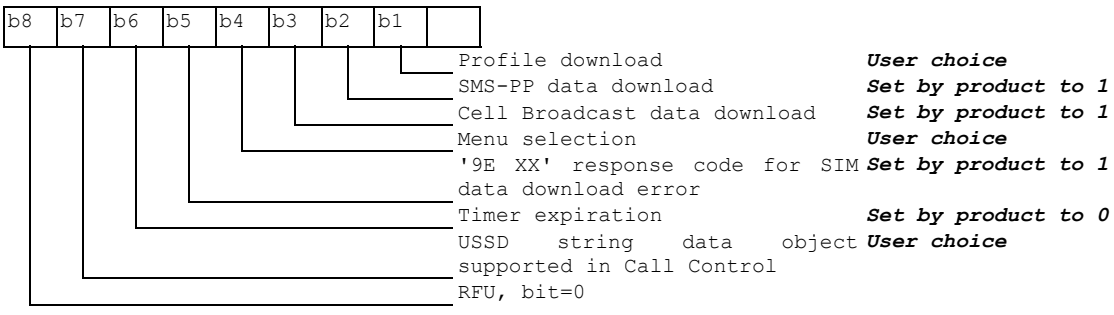



All rights reserved
Wavecom Confidential & Proprietary Information
This document is the sole and exclusive property of WAVECOM. Not to be distributed or divulged without prior written agreement.

Second byte (Other):

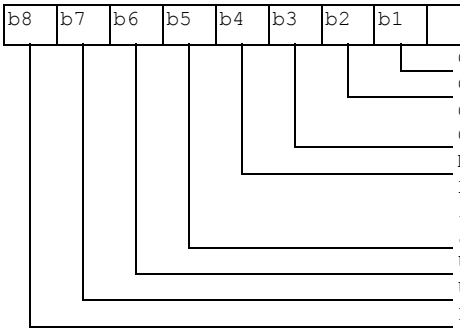


| | |
|---|---|
| Command result | ***User choice*** |
| Call Control by SIM | ***User choice*** |
| Cell identity included in Call Control by SIM | ***User choice*** |
| MO short message control by SIM | ***User choice*** |
| Handling of the alpha identifier according to subclause 9.1.3 | ***User choice*** |
| UCS2 Entry supported | ***User choice*** |
| UCS2 Display supported | ***User choice*** |
| Display of the extension text | ***User choice*** |

Third byte (Proactive SIM):

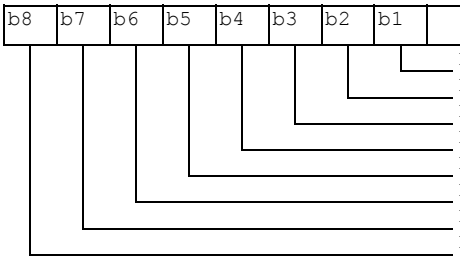


| | |
|---|---|
| Proactive SIM: DISPLAY TEXT | ***User choice*** |
| Proactive SIM: GET INKEY | ***User choice*** |
| Proactive SIM: GET INPUT | ***User choice*** |
| Proactive SIM: MORE TIME | ***User choice*** |
| Proactive SIM: PLAY TONE | ***User choice*** |
| Proactive SIM: POLL INTERVAL | ***Set by product to 1*** |
| Proactive SIM: POLLING OFF | ***Set by product to 1*** |
| Proactive SIM: REFRESH | ***User choice*** |

Fourth byte (Proactive SIM):

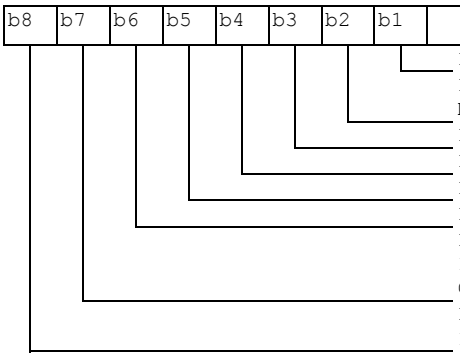


| | |
|---|---|
| Proactive SIM: SELECT ITEM | ***User choice*** |
| Proactive SIM: SEND SHORT MESSAGE | ***User choice*** |
| Proactive SIM: SEND SS | ***User choice*** |
| Proactive SIM: SEND USSD | ***User choice*** |
| Proactive SIM: SET UP CALL | ***User choice*** |
| Proactive SIM: SET UP MENU | ***User choice*** |
| Proactive SIM: PROVIDE LOCAL INFORMATION (MCC, MNC, LAC, Cell ID & IMEI) | ***Set by product to 1*** |
| Proactive SIM: PROVIDE LOCAL INFORMATION (NMR) | ***Set by product to 1*** |

Fifth byte (Event driven information):

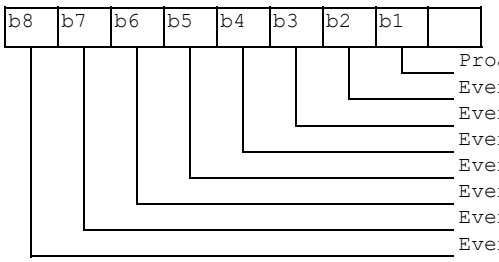


| | |
|---|---|
| Proactive SIM: SET UP EVENT LIST | ***Set by product to 1*** |
| Event: MT call | ***Set by product to 1*** |
| Event: Call connected | ***Set by product to 1*** |
| Event: Call disconnected | ***Set by product to 1*** |
| Event: Location status | ***Set by product to 1*** |
| Event: User activity | ***User choice*** |
| Event: Idle screen available | ***User choice*** |
| Event: Card reader status | ***Set by product to 0*** |

© 2003-2004 All rights reserved
Wavecom Confidential & Proprietary Information

This document is the sole and exclusive property of WAVECOM. Not to be distributed or divulged without prior written agreement.

Sixth byte: (reserved for Event driven information extensions)

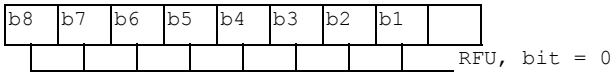


Seventh byte (Multiple card proactive commands) for class "a"

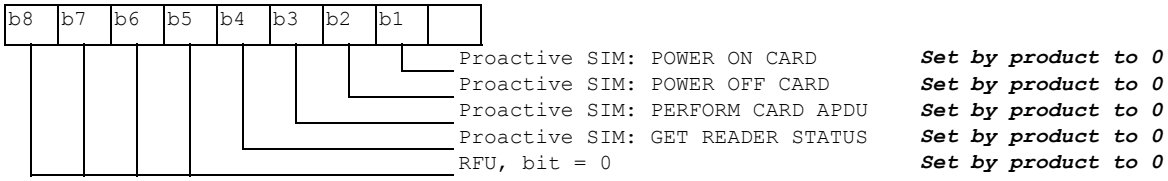


Eighth byte (Proactive SIM):

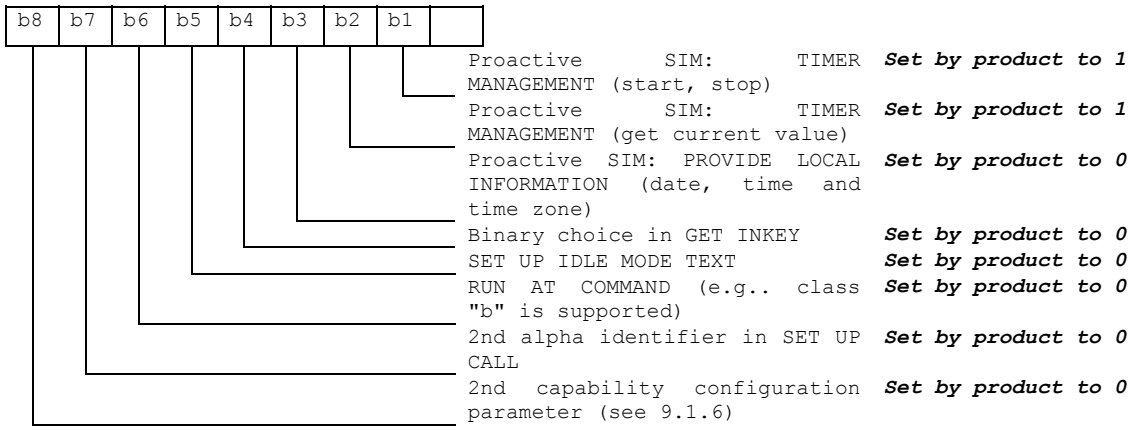


Ninth byte:

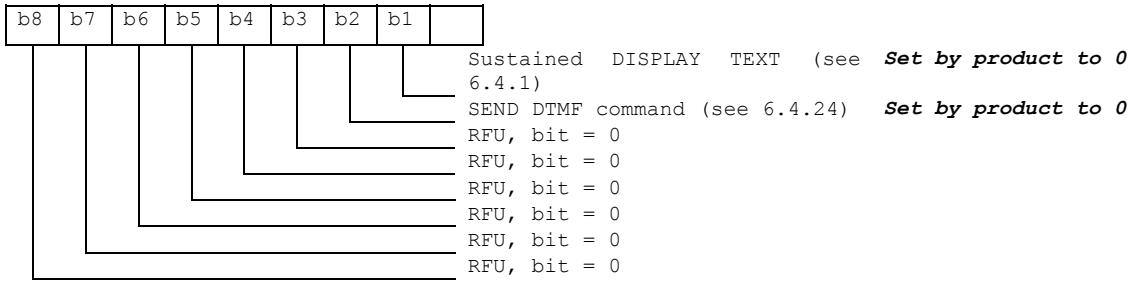


Subsequent bytes:

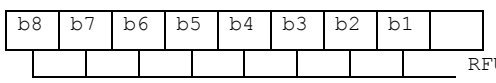


wavecom © 2003-2004 All rights reserved
Wavecom Confidential & Proprietary Information

This document is the sole and exclusive property of WAVECOM. Not to be distributed or divulged without prior written agreement.

## Information about BCCH channel list

(this is an extract of GSM Rec 11.14)

| Byte(s) | Description | Length |
|---|---|---|
| 1 | BCCH channel list tag | 1 |
| 2 | Length (X) of bytes following | 1 |
| 3 to X+2 | BCCH channel list | X |

- BCCH channel list

Contents: the list of absolute RF channels for BCCH carriers, as known by the ME from the SYSTEM INFORMATION messages. The BCCH channel list is composed of one to three BCCH channel sub lists, each sub list is derived from the set of frequencies defined by reference neighbor cells description information element or elements. In the latter case the set is the union of the different subsets defined by the neighbor cells description information elements (see TS 04.08 [8]). The length of the BCCH channel list field depends on the length of the received BCCH channel list derived from the different SYSTEM INFORMATION messages to be considered.

Coding: Each ARFCN *(Absolute Radio Frequency Channel Number)* is represented by 10 bits. Spare bit(s) are to be filled with 0.

| | Bit 8 | Bit 7 | Bit 6 | Bit 5 | Bit 4 | Bit 3 | Bit 2 | Bit 1 |
|---|---|---|---|---|---|---|---|---|
| Byte 1 | ARFCN#1 (high part) | | | | | | | |
| Byte 2 | ARFCN#1 (low part) | | ARFCN#2 (high part) | | | | | |
| Byte 3 | ARFCN#2 (low part) | | | | ARFCN#3 (high part) | | | |
| ... | ... | | | | | | | |
| Byte X-1 | ARFCN#m-1 (low part) | | | | ARFCN#m (high part) | | | |
| Byte X | ARFCN#m (low part) | | | | | | Spare bit (0) | Spare bit(0) |

SIM applications should take into account that early implementations of SIM application toolkit may have coded this field differently, because of an inconsistency between the content and the coding of this element in previous versions of 11.14. The SIM is able to identify MEs that are using the coding described above by evaluating the indication "BCCH Channel List coding" in the TERMINAL PROFILE command.

wavecom © 2003-2004 All rights reserved
Wavecom Confidential & Proprietary Information

This document is the sole and exclusive property of WAVECOM. Not to be distributed or divulged without prior written agreement.

## 3.4 Command Type and Next Action Indicator.

This table has been extracted from the GSM Technical specification 11.14.

| Value | Name | | Used for Type of Command coding | used for Next Action Indicator coding |
|---|---|---|---|---|
| '00' | | | - | - |
| '01' | REFRESH | | X | |
| '02' | MORE TIME | | X | |
| '03' | POLL INTERVAL | | X | |
| '04' | POLLING OFF | | X | |
| '05' | SET UP EVENT LIST | | X | |
| '10' | SET UP CALL | | X | X |
| '11' | SEND SS | | X | X |
| '12' | SEND USSD | | X | X |
| '13' | SEND SHORT MESSAGE | | X | X |
| '14' | SEND DTMF | | X | |
| '20' | PLAY TONE | | X | X |
| '21' | DISPLAY TEXT | | X | X |
| '22' | GET INKEY | | X | X |
| '23' | GET INPUT | | X | X |
| '24' | SELECT ITEM | | X | X |
| '25' | SET UP MENU | | X | X |
| '26' | PROVIDE LOCAL INFORMATION | | X | |
| '27' | TIMER MANAGEMENT | | X | |
| '28' | SET UP IDLE MODEL TEXT | | X | X |
| '30' | PERFORM CARD APDU | class "a" only | X | X |
| '31' | POWER ON CARD | class "a" only | X | X |
| '32' | POWER OFF CARD | class "a" only | X | X |
| '33' | GET READER STATUS | class "a" only | X | X |
| '34' | RUN AT COMMAND | class "b" only | X | |
| '81' | End of the proactive session | | not applicable | X |

wavecom © 2003-2004 All rights reserved
Wavecom Confidential & Proprietary Information

This document is the sole and exclusive property of WAVECOM. Not to be distributed or divulged without prior written agreement.

## 3.5 Coding of Alpha fields in the SIM for UCS2

The coding can take one of the three following structures, or GSM default alphabet. If the ME supports UCS2 coding of alpha fields in the SIM, it will support all three coding schemes for character sets containing 128 characters or less. For character sets containing more than 128 characters, the ME will at least support the first coding scheme. Within a record, only one coding scheme, either GSM default alphabet, or one of the three described below, can be used.

1) If the **first byte in the alpha string is '0x80'**, then the other bytes are 16 bit UCS2 characters. The most significant byte (MSB) of the UCS2 character is coded in the lower numbered byte of the alpha field, and the less significant byte (LSB) of the UCS2 character is coded in the higher numbered alpha field byte. In other words, byte 2 of the alpha field contains the most significant byte (MSB) of the first UCS2 character, and byte 3 of the alpha field contains the less significant byte (LSB) of the first UCS2 character (as shown below). Unused bytes shall be set to 'FF': if the alpha field has an even length in bytes, the last (unusable) byte will be set to 'FF'.

**Example 1**

| Byte 1 | Byte 2 | Byte 3 | Byte 4 | Byte 5 | Byte 6 | Byte 7 | Byte 8 | Byte 9 |
|---|---|---|---|---|---|---|---|---|
| '80' | $Ch1_{MSB}$ | $Ch1_{LSB}$ | $Ch2_{MSB}$ | $Ch2_{LSB}$ | $Ch3_{MSB}$ | $Ch3_{LSB}$ | 'FF' | 'FF' |

2) **If the first byte of the alpha string is '0x81'**, then the 2nd byte contains a value indicating the number of characters in the string. The 3rd byte contains an 8 bit number which defines bits 15 to 8 of a 16 bit base pointer, where bit 16, and bits 7 to 1 would be set to zero. These sixteen bits represent a base pointer to a "half-page" in the UCS2 code space, to be used with some or all of the remaining bytes in the string. The 4th and subsequent bytes in the string contain coding as follows:
   - if bit 8 of the byte is set to zero, the remaining bits of the byte contain a GSM Default Alphabet character
   - if bit 8 of the byte is set to one, the remaining bits are an offset value to add to the 16 bit base pointer defined by byte 3, and the resulting 16 bit value is a UCS2 code point, and defines a UCS2 character.

**Example 2**

| Byte 1 | Byte 2 | Byte 3 | Byte 4 | Byte 5 | Byte 6 | Byte 7 | Byte 8 | Byte 9 |
|---|---|---|---|---|---|---|---|---|
| '81' | '05' | '13' | '53' | '95' | 'A6' | '28' | 'FF' | 'FF' |

© 2003-2004 All rights reserved
Wavecom Confidential & Proprietary Information

This document is the sole and exclusive property of WAVECOM. Not to be distributed or divulged without prior written agreement.

In the example above

- Byte 2 indicates there are 5 characters in the string
- Byte 3 indicates bits 15 to 8 of the base pointer, and indicates a bit pattern of 0hhh shah h000 0000 as the 16 bit base pointer number. Bengali characters for example start at code position 0980 (0*000 1001 1*000 0000), which is indicated by the coding '13' in byte 3 (shown by the italicized underlined digits).
- Byte 4 indicates GSM Default Alphabet character '53', e.g.. "S".
- Byte 5 indicates a UCS2 character offset to the base pointer of '15', expressed in binary as follows 001 0101, which, when added to the base pointer value results in a sixteen bit value of 0000 1001 1001 0101, e.g.. '0995', which is the Bengali letter KA.
- Byte 8 contains the value 'FF': as the string length is 5, this a valid character in the string, where the bit pattern 111 1111 is added to the base pointer, yielding to a sixteen bit value of 0000 1001 1111 1111 for the UCS2 character (that is '09FF').
- Byte 9 contains the padding value OxFF.

3) **If the first byte of the alpha string is set to '0x82'**, then the 2nd byte contains the length of the string (number of characters).
The 3rd and 4th bytes contain a 16 bit number which defines the complete 16 bit base pointer to a "half-page" in the UCS2 code space, for use with some or all of the remaining bytes in the string.
The 5th and subsequent bytes in the string contain coding as follows:
   - if bit 8 of the byte is set to zero, the remaining seven bits of the byte contain a GSM Default Alphabet character,
   - if bit 8 of the byte is set to one, the remaining seven bits are an offset value added to the base pointer defined in bytes 3 and 4, and the resulting 16 bit value is a UCS2 code point, and defines a UCS2 character.

**Example 3**

| Byte 1 | Byte 2 | Byte 3 | Byte 4 | Byte 5 | Byte 6 | Byte 7 | Byte 8 | Byte 9 |
|---|---|---|---|---|---|---|---|---|
| '82' | '05' | '05' | '30' | '2D' | '82' | 'D3' | '2D' | '31' |

In the example above:

- Byte 2 indicates there are 5 characters in the string
- Bytes 3 and 4 contain a 16 bit base pointer number of '0530', pointing to the first character of the Armenian character set.
- Byte 5 contains a GSM Default Alphabet character of '2D', which is a dash "-".
- Byte 6 contains a value '82', which indicates it is an offset of '02' added to the base pointer, resulting in a UCS2 character code of '0532', which represents Armenian character Capital BEN.
- Byte 7 contains a value 'D3', an offset of '53', which when added to the base pointer results in a UCS2 code point of '0583', representing Armenian Character small PIWR.

wavecom © 2003-2004 All rights reserved
Wavecom Confidential & Proprietary Information

This document is the sole and exclusive property of WAVECOM. Not to be distributed or divulged without prior written agreement.

## 3.6 Specification of Power Down Control via RS232

This appendix describes how to activate and deactivate the power down mode of the product via the RS232 serial link. Refer to +W32K to activate or deactivate the power down mode.

In this document, the term "DTE" refers to the customer device driving the product, which is referred to as the "DCE".

The terms referring to the RS232 signals and levels are used according to the V.24 and V.28 recommendations. Here are some points to remind:

- DTR is the circuit 108/2,
- TX is the circuit 103,
- RX is the circuit 102,
- CTS is the circuit 106.
- The logical level "HIGH or ON" corresponds to the electrical level of +12 V, and the level "LOW or OFF" corresponds to –12 V.
- The activation and deactivation are always initiated from the DTE and is carried out through the handshaking of DTR and CTS.

The power down mode can be triggered only when the DCE is idle, that means when there is no connection to the network in progress.

When the DTE requests the DCE to enter the power down mode, it (DTE) drops (ON-to-OFF transition) DTR. From this time on, it (DTE) **must not send** any more characters on the TX line: the TX FIFO must be empty.

The DCE acknowledges its entry in the power down mode by dropping CTS, within a time interval of 5s. after the DTR drop. During that period the DTE is prohibited from sending any more AT commands.

AT responses can be sent to the DTE even if the DCE is in power down mode: for this, it (DCE) suspends its power down mode, sends the requested AT response and recovers the power down mode. Therefore the DTE can trigger DCE power down mode without having to take care of any AT responses

The DTE exits the power down mode by raising the DTR. DCE is not ready to receive further AT commands until it raises in turn CTS, within a time interval of 2s. after the DTR raise.

© 2003-2004 All rights reserved
Wavecom Confidential & Proprietary Information
This document is the sole and exclusive property of WAVECOM. Not to be distributed or divulged without prior written agreement.

Here below is a diagram depicting the handshaking:

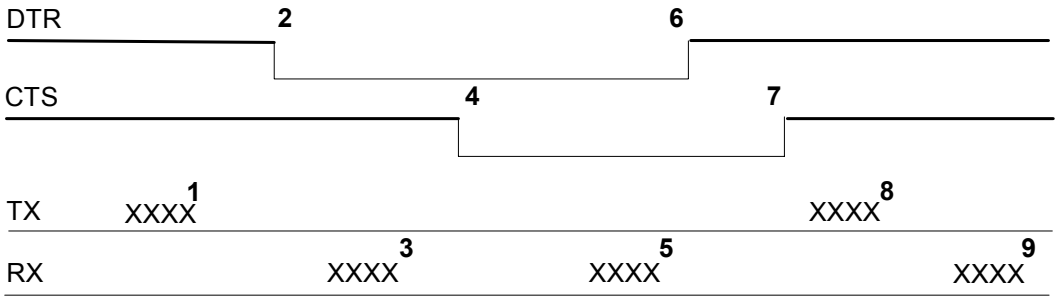


Description of the steps:

1: the DTE sends an AT command

2: the DTE drops DTR to make the DCE enter the power down mode. Warning: this mode will not really enter until CTS is dropped (step 4). The DTE could also have dropped DTR after having received the AT response (step 3).

3: the DCE sends back the AT response (if any)

4: the DCE drops CTS: it enters the power down mode.

5: the DCE sends back an unsolicited response (for instance a RING or +SMTI (incoming SMS indication))

6: the DTE wants to reply to that unsolicited response so it raises the DTR, causing the DCE to exit the power down mode.

7: the DCE acknowledges the exit of the power down mode by raising CTS.

8) & 9) exchange of AT commands/responses.

Note 1): The DTE must not send any AT commands from steps 2 to 7.
Note 2): During the latency period (between steps 2 and 4) should the DTE want to abort the power down mode, it raises DTR and should wait for 150µs before assessing CTS. If CTS is still high than the DCE has aborted the power down mode and is ready to receive AT commands.

The 150µs wait should get around the race condition between DTR raise and CTS drop.

Warning: The diagram above is V.28 compliant (PC interface), meaning the HIGH level corresponds to +12V, and the LOW level to –12V.

© 2003-2004 All rights reserved
Wavecom Confidential & Proprietary Information
This document is the sole and exclusive property of WAVECOM. Not to be distributed or divulged without prior written agreement.

## 3.7 Description of Multi-Flow behavior

Multi-flows allows the module to treat commands from various sources (or flows):

- UART ports
- USB port
- embedded Open-AT applications.

AT commands are organized in classes , and multi-flow allows the simultaneous execution of commands of different classes coming from the possible sources:

- commands belonging to the same class can not be treated as the same time. When a command of a class is treated, the module will respond "busy" to any command of the same class until the first command processing has completed.
- when a flow is waiting for the treatment of a command, it is busy until the command execution completion.

Example:

1) The module receives a command of class AT_CLASS_PHONEBOOK on UART1. The processing of the command starts, and a response from the phonebook entity is expected. No other command of the AT_CLASS_PHONEBOOK class can be processed, and the UART1 port is busy.
2) The module receives then a command from USB port, of another class. It is able to immediately process this second command.
3) When the phonebook entity answers, the first command's processing completes. UART1 port and AT_CLASS_PHONEBOOK class are released.

Notes:

- concatenation of commands remains possible,
- the Repeat command (A/) runs independently for each flow,
- an embedded Open-AT application may changes data redirection.

© 2003-2004 All rights reserved
Wavecom Confidential & Proprietary Information

This document is the sole and exclusive property of WAVECOM. Not to be distributed or divulged without prior written agreement.

### 3.7.1 Commands classes

There are 27 commands classes, presented in the array below:

| Class name | Related commands |
|---|---|
| AT_CLASS_A_SLASH | A/ |
| AT_CLASS_AGENDA | +WAGR, +WAGD, +WAGW |
| AT_CLASS_COM | +CHLD, +VTD, +VTS, +WATH, A, D, DL, H, O |
| AT_CLASS_CPHS | +CPHS, +WALS, +WMBN |
| AT_CLASS_DATA | +CRLP, +DOPT |
| AT_CLASS_FAX | +FBOR, +FBUF, +FCQ, +FCR, +FDCC, +FDIS, +FPHCT, +FRH, +FRM, +FRS, +FTH, +FTM, +FTS, FLID |
| AT_CLASS_GPRS | +CGACT, +CGANS, +CGATT, +CGAUT, +CGCLA, +CGDATA, +CGDCO, +CGERE, +CGPAD, +CGQMI, +CGQRE, +CGREG, +CGSMS, +GCAP, +WGPRS |
| AT_CLASS_LOCATION | +WLOC |
| AT_CLASS_MAIN | %D, &C, &D, &E, &F, &S, &T, &V, &W, +ADC, +CALA, +CBST, +CCLK, +CEER, +CGMI, +CGMM, +CGMR, +CGSN, +CICB, +CIND, +CLCC, +CMEC, +CMEE, +CMER, +CMUT, +CPAS, +CR, +CRC, +CREG, +CRMP, +CRSL, +CSCS, +CSNS, +CSVM, +ECHO, +FCLAS, +ICF, +IFC, +ILRR, +IPR, +SIDET, +SPEAK, +VGR, +VGT, +VIP, +W32K, +WAC, +WBCM, +WBM, +WBR, +WBW, +WCCS, +WCDM, +WCDP, +WCFM, +WCTM, +WDOP, +WDR, +WDTMF, +WDWL, +WFM, +WHWV, +WIMEI, +WIND, +WIOM, +WIOR, +WIOW, +WLCK, +WMIR, +WMSN, +WMUX, +WOPEN, +WPCS, +WRIM, +WRST, +WSCAN, +WSST, +WSSW, +WSTR, +WSVG, +WSVN, +WTONE, +WVR, E, I, Q, S, V, Z, +WMFM, +WOPEN, +WCOS |
| AT_CLASS_NETWORK | +CCED, +COPN, +COPS, +CPLS, +CPOL, +CSQ, +WMBS, +WOPN |
| AT_CLASS_PHONEBOOK | +CNUM, +CPBF, +CPBN, +CPBP, +CPBR, +CPBS, +CPBW, +WAIP, +WDCP |
| AT_CLASS_PHONEBOOK | WPGW, WPGR, WPGS |
| AT_CLASS_POFF | +CFUN, +CPOF, +WBHV |
| AT_CLASS_RIL | +CRSM, +CSIM |
| AT_CLASS_RS | +CPWL |
| AT_CLASS_SECURITY | +CLCK, +CPIN, +CPIN2, +CPINC, +CPWD |
| AT_CLASS_SIM | +CCID, +CIMI, +WLPR, +WLPW |
| AT_CLASS_SMS | +CMGD, +CMGF, +CMGL, +CMGR, +CMGS, +CMGW, +CMSS, +CNMA, +CNMI, +CPMS, +CRES, +CSAS, +CSCA, +CSCB, +CSDH, +CSMP, +CSMS, +WCBM, +WMGO, +WMSC, +WUSS, +WMCP |

wavecom © 2003-2004 All rights reserved
Wavecom Confidential & Proprietary Information

This document is the sole and exclusive property of WAVECOM. Not to be distributed or divulged without prior written agreement.

| Class name | Related commands |
|---|---|
| AT_CLASS_SS | +CACM, +CAMM, +CAOC, +CCFC, +CCUG, +CCWA, +CKPD, +CLIP, +CLIR, +COLP, +CPUC, +CSSN, +CUSD |
| AT_CLASS_STLK | +STGI, +STGR, +STIN, +STSF |
| AT_CLASS_V24B | %C, \N, +DR, +DS |
| AT_CLASS_WAP | +WWAPD, +WWAPG, +WWAPP, +WWAPS, +WLNK, +WWAPBR, +WHTTPR, +WWAPBO |

### 3.7.2 Remark on error 536

When a class is locked and when another command belonging to the same class arrives, module answers +CME ERROR: 536.

© 2003-2004 All rights reserved
Wavecom Confidential & Proprietary Information

This document is the sole and exclusive property of WAVECOM. Not to be distributed or divulged without prior written agreement.

# 4 Command execution and dependence to SIM

These arrays list all the AT command. For each, a column indicates the command execution condition (if +WIND:4 must have occurred OK, for example). SIM dependency column indicates if the command behavior will vary if another card is used (for example, it will be the case for phonebook reading commands). The Intermediate column indicates if intermediate responses can occur for the considered command.

## 4.1 General commands

| AT commands | Conditions | SIM dependence | Intermediate |
|---|---|---|---|
| AT+CGMI | None | N | N |
| AT+CGMM | None | N | N |
| AT+CGMR | None | N | N |
| AT+CGSN | None | N | N |
| AT+CSCS | +WIND: 4 | N | N |
| AT+WPCS | +WIND: 4 | N | N |
| AT+CIMI | +WIND: 4 | Y | N |
| AT+CCID | +WIND: 1 | Y | N |
| AT+GCAP | None | N | N |
| A/ | Depends on previous command | Depends on previous command | N |
| AT+CPOF | +WIND: 3 without SIM,<br>+WIND: 1 with SIM | N | N |
| AT+CFUN | None | N | N |
| AT+CPAS | None | N | N |
| AT+CMEE | None | N | N |
| AT+CKPD | Depends of the sequence used | Y/N | N |
| AT+CCLK | None | Y | N |
| AT+CALA | None | N | Y |
| AT+CRMP | None | N | N |
| AT+CRSL | None | N | N |

wavecom © 2003-2004 All rights reserved
Wavecom Confidential & Proprietary Information

This document is the sole and exclusive property of WAVECOM. Not to be distributed or divulged without prior written agreement.

## 4.2 Call Control commands

| AT commands | Conditions | SIM dependence | Intermediate |
|---|---|---|---|
| ATD | Depends of sequence used | Y/N | Y |
| ATH | None | N | N |
| ATA | None | N | N |
| AT+CEER | +WIND: 4 | Y | N |
| AT+VTD | None | N | N |
| AT+VTS | +WIND: 5 | N | N |
| ATDL | None | N | Y |
| AT%D | None | N | N |
| ATS0 | None | N | N |
| AT+CICB | None | N | N |
| AT+CSNS | None | N | N |
| AT+VGR | None | N | N |
| AT+VGT | None | N | N |
| AT+CMUT | +WIND:5 | N | N |
| AT+SPEAKER | None | N | N |
| AT+ECHO | None | N | N |
| AT+SIDET | None | N | N |
| AT+VIP | None | N | N |

## 4.3 Network service commands

| AT commands | Conditions | SIM dependence | Intermediate |
|---|---|---|---|
| AT+CSQ | None | N | N |
| AT+COPS | +WIND: 4 | Y | N |
| AT+CREG | None | N | Y |
| AT+WOPN | None | N | N |
| AT+CPLS | PIN | Y | N |
| AT+CPOL | After PIN entered | Y | Y |
| AT+COPN | After PIN entered | N | N |

## 4.4 Security commands

| AT commands | Conditions | SIM dependence | Intermediate |
|---|---|---|---|
| AT+CPIN | +WIND: 1 | Y | N |
| AT+CPIN2 | after PIN entered | Y | N |
| AT+CPINC | +WIND: 1 | Y | N |
| AT+CLCK | +WIND: 4 | Y | N |
| AT+CPWD | +WIND: 4 | Y | N |

© 2003-2004 All rights reserved
Wavecom Confidential & Proprietary Information

This document is the sole and exclusive property of WAVECOM. Not to be distributed or divulged without prior written agreement.

## 4.5 Phonebook commands

| AT commands | Conditions | SIM dependence | Intermediate |
|---|---|---|---|
| AT+CPBS | +WIND: 4 | Y | N |
| AT+CPBR | +WIND: 4 | Y | Y |
| AT+CPBF | +WIND: 4 | Y | Y |
| AT+CPBW | +WIND: 4 | Y | N |
| AT+CPBP | +WIND: 4 | Y | Y |
| AT+CPBN | +WIND: 4 | Y | Y |
| AT+CNUM | +WIND: 4 | Y | N |
| AT+WAIP | None | N | N |
| AT+WDCP | +WIND: 4 | Y | N |
| AT+CSVM | +WIND: 4 | N | N |
| AT+WCOS | None | N | N |
| AT+WPGW | +WIND: 4 | N | N |
| AT+WPGR | +WIND: 4 | N | Y |
| AT+WPGS | +WIND: 4 | N | Y |

## 4.6 Short Messages commands

| AT commands | Conditions | SIM dependence | Intermediate |
|---|---|---|---|
| AT+CSMS | +WIND: 4 | Y | N |
| AT+CNMA | +WIND: 4 | Y | N |
| AT+CPMS | +WIND: 4 | Y | N |
| AT+CMGF | None | N | N |
| AT+CSAS | | Y | N |
| AT+CRES | | Y | N |
| AT+CSDH | +WIND: 4 | Y | N |
| AT+CNMI | +WIND: 4 | Y | N |
| AT+CMGR | +WIND: 4 | Y | Y |
| AT+CMGL | +WIND: 4 | Y | Y |
| AT+CMGS | +WIND: 4 | Y | N |
| AT+CMGW | +WIND: 4 | Y | Y |
| AT+CMSS | +WIND: 4 | Y | N |
| AT+CSMP | +WIND: 4 | Y | N |
| AT+CMGD | +WIND: 4 | Y | N |
| AT+CSCA | | Y | N |
| AT+CSCB | +WIND: 4 | Y | N |
| AT+WCBM | +WIND: 4 | Y | N |
| AT+WMSC | +WIND: 4 | Y | Y |
| AT+WMGO | +WIND: 4 | Y | N |
| AT+WUSS | None | N | N |
| AT+WMCP | +WIND: 4 | Y | N |

© 2003-2004 All rights reserved
Wavecom Confidential & Proprietary Information

This document is the sole and exclusive property of WAVECOM. Not to be distributed or divulged without prior written agreement.

| AT commands | Conditions | SIM dependence | Intermediate |
|---|---|---|---|
| AT+CMMS | None | Yes | No |

## 4.7 Supplementary Services commands

| AT commands | Conditions | SIM dependence | Intermediate |
|---|---|---|---|
| AT+CCFC | +WIND: 4 | Y | N |
| AT+CLCK | +WIND: 4 | Y | N |
| AT+CPWD | +WIND: 4 | Y | N |
| AT+CCWA | +WIND: 4 | Y | N |
| AT+CLIR | After PIN entered | Y | N |
| AT+CLIP | After PIN entered | Y | N |
| AT+COLP | After PIN entered | Y | N |
| AT+CAOC | After PIN entered | Y | Y |
| AT+CACM | After PIN entered | Y | N |
| AT+CAMM | After PIN entered | Y | N |
| AT+CPUC | After PIN entered | Y | N |
| AT+CHLD | +WIND: 5,2 | Y | N |
| AT+CLCC | None | N | N |
| AT+CSSN | None | N | N |
| AT+CUSD | None | N | N |
| AT+CCUG | +WIND: 4 | Y | Y |

## 4.8 Data commands

| AT commands | Conditions | SIM dependence | Intermediate |
|---|---|---|---|
| AT+CBST | None | N | N |
| AT+FCLASS | None | N | N |
| AT+CR | None | N | N |
| AT+CRC | None | N | N |
| AT+ILRR | After PIN entered | N | N |
| AT+CRLP | None | N | N |
| AT+DOPT | None | N | N |
| AT%C | None | N | N |
| AT+DS | None | N | N |
| AT+DR | None | N | N |
| \N | None | N | N |

© 2003-2004 All rights reserved
Wavecom Confidential & Proprietary Information

This document is the sole and exclusive property of WAVECOM. Not to be distributed or divulged without prior written agreement.

## 4.9 Fax commands

| AT commands | Conditions | SIM dependence | Intermediate |
|---|---|---|---|
| AT+FTM | None | N | N |
| AT+FRM | None | N | N |
| AT+FTH | None | N | N |
| AT+FRH | None | N | N |
| AT+FTS | None | N | N |
| AT+FRS | None | N | N |

## 4.10 Class 2 Commands

| AT commands | Conditions | SIM dependence | Intermediate |
|---|---|---|---|
| AT+FDT | +CLCC:X,X,0,2,X (fax call) | N | N |
| AT+FDR | +CLCC:X,X,0,2,X (fax call) | N | N |
| AT+FET | +CLCC:X,X,0,2,X (fax call) | N | N |
| AT+FPTS | +CLCC:X,X,0,2,X (fax call) | N | N |
| AT+FK | +CLCC:X,X,0,2,X (fax call) | N | N |
| AT+FBOR | None | N | N |
| AT+FBUF | None | N | N |
| AT+FCQ | None | N | N |
| AT+FCR | None | N | N |
| AT+FDIS | None | N | N |
| AT+FDCC | None | N | N |
| AT+FLID | None | N | N |
| AT+FPHCTO | None | N | N |

wavecom © 2003-2004 All rights reserved
Wavecom Confidential & Proprietary Information

This document is the sole and exclusive property of WAVECOM. Not to be distributed or divulged without prior written agreement.

## 4.11 V24-V25 commands

| AT commands | Conditions | SIM dependence | Intermediate |
|---|---|---|---|
| AT+IPR | None | N | N |
| AT+ICF | None | N | N |
| AT+IFC | None | N | N |
| AT&C | None | N | N |
| AT&D | None | N | N |
| AT&S | None | N | N |
| ATO | +CLCC:X,0,0,1,X (data call) | N | N |
| ATQ | None | N | N |
| ATV | None | N | N |
| ATZ | None | N | N |
| AT&W | None | N | N |
| AT&T | None | N | N |
| ATE | None | N | N |
| AT&F | None | N | N |
| AT&V | None | N | N |
| ATI | None | N | N |
| AT+WMUX | None | N | N |

## 4.12 Specific AT commands

| AT commands | Conditions | SIM dependence | Intermediate |
|---|---|---|---|
| AT+CCED | None | N | N |
| AT+WIND | None | N | N |
| AT+ADC | None | N | N |
| AT+CMER | None | N | N |
| AT+CIND | None | N | N |
| AT+CMEC | None | N | N |
| AT+WLPR | +WIND: 1 | N | N |
| AT+WLPW | +WIND: 1 | N | N |
| AT+WIOR | None | N | N |
| AT+WIOW | None | N | N |
| AT+WIOM | None | N | N |
| AT+WAC | None | N | N |
| AT+WTONE | None | N | N |
| AT+WDTMF | None | N | N |
| AT+WDWL | None | N | N |
| AT+WVR | None | N | N |
| AT+WDR | None | N | N |
| AT+WHWV | None | N | N |
| AT+WDOP | None | N | N |
| AT+WSVG | None | N | N |
| AT+WSTR | None | N | N |

© 2003-2004 All rights reserved
Wavecom Confidential & Proprietary Information

This document is the sole and exclusive property of WAVECOM. Not to be distributed or divulged without prior written agreement.

| AT commands | Conditions | SIM dependence | Intermediate |
|---|---|---|---|
| AT+WSCAN | None | N | N |
| AT+WRIM | None | N | N |
| AT+W32K | None | N | N |
| AT+WCDM | None | N | N |
| AT+WSSW | None | N | N |
| AT+WCCS | +WIND: 4 | N | N |
| AT+WLCK | None (PIN for auto CNL) | N (Y for auto CNL) | N |
| AT+CPHS | +WIND: 4 | Y | N |
| AT+WBCM | None | N | N |
| AT+WFM | None | N | N |
| AT+WCFM | None | N | N |
| AT+WMIR | None | N | N |
| AT+WCDP | None | N | N |
| AT+WMBN | PIN | Y | N |
| AT+WALS | +WIND:4 | Y | N |
| AT+WOPEN | None | N | N |
| AT+WRST | None | N | N |
| AT+WSST | None | N | N |
| AT+WLOC | PIN Code | Y | N |
| AT+WBR | None | N | N |
| AT+WBW | None | N | N |
| AT+WBM | None | N | N |
| AT+WATH | None | N | N |
| AT+WIMEI | None | N | N |
| AT+WSVN | None | N | N |
| AT+WMBS | None | N | N |
| AT+WMFM | None | No | No |
| AT+WBHV | None | N | N |

## 4.13 Agenda Commands

| AT commands | Conditions | SIM dependence | Intermediate |
|---|---|---|---|
| AT+WAGW | None | N | N |
| AT+WAGR | None | N | Y |
| AT+WAGD | None | N | N |

© 2003-2004 All rights reserved
Wavecom Confidential & Proprietary Information

This document is the sole and exclusive property of WAVECOM. Not to be distributed or divulged without prior written agreement.

## 4.14 WAP commands

| AT commands | Conditions | SIM dependence | Intermediate |
|---|---|---|---|
| +WWAPD | None | No | Yes |
| +WWAPG | None | No | Yes |
| +WWAPP | None | No | Yes |
| +WWAPS | None | No | No |
| +WLNK | None | No | No |
| +WWAPBR | +WIND:4 | No | No |
| +WHTTPR | +WIND:4 | No | No |
| +WWAPBO | None | No | No |

## 4.15 SIM Toolkit commands

| AT commands | Conditions | SIM dependence | Intermediate |
|---|---|---|---|
| AT+STSF | None | N | N |
| AT+STIN | +WIND: 4 | Y | N |
| AT+STGI | +WIND: 4 | Y | N |
| AT+STGR | +WIND: 4 | Y | N |

## 4.16 GPRS commands

| AT commands | Conditions | SIM dependence | Intermediate |
|---|---|---|---|
| AT+CGDCONT | +WIND:4 | | |
| AT+CGQREQ | +WIND:4 | | |
| AT+CGQMIN | +WIND:4 | | |
| AT+CGATT | +WIND:4 | | |
| AT+CGACT | +WIND:4 | | |
| AT+CGDATA | +WIND:4 | | |
| AT+CGCLASS | +WIND:3 | N | N |
| AT+CGCLASS | +WIND:4 | | |
| AT+CGSMS | +WIND:4 | | |
| AT+CGREP | +WIND:4 | | |
| AT+CGREG | +WIND:4 | | |
| AT+CGAUTO | +WIND:4 | | |
| AT+CGANS | +WIND:4 | | |
| AT+CGADDR | +WIND:4 | | |
| AT+WGPRS | | None | N |

© 2003-2004 All rights reserved
Wavecom Confidential & Proprietary Information

This document is the sole and exclusive property of WAVECOM. Not to be distributed or divulged without prior written agreement.

# 5 Interoperability

All the commands listed below are only used for interoperability with other applications. They have no action and always reply OK.

| Command | Responses |
|---|---|
| ATB | OK |
| ATC | OK |
| ATG | OK |
| ATL | OK |
| ATM | OK |
| ATN | OK |
| ATP | OK |
| ATT | OK |
| ATW | OK |
| ATX | OK |
| ATY | OK |
| AT\K | OK |
| AT&E | OK |
| AT&G | OK |
| AT&K | OK |
| AT&P | OK |
| AT&Q | OK |
| AT&R | OK |
| AT&Y | OK |
| AT+GOI | OK |
| AT+GCI | OK |

wavecom © 2003-2004 All rights reserved
Wavecom Confidential & Proprietary Information

This document is the sole and exclusive property of WAVECOM. Not to be distributed or divulged without prior written agreement.